CITY OF BAINBRIDGE ISLAND

WATERFRONT DOCK RENOVATION

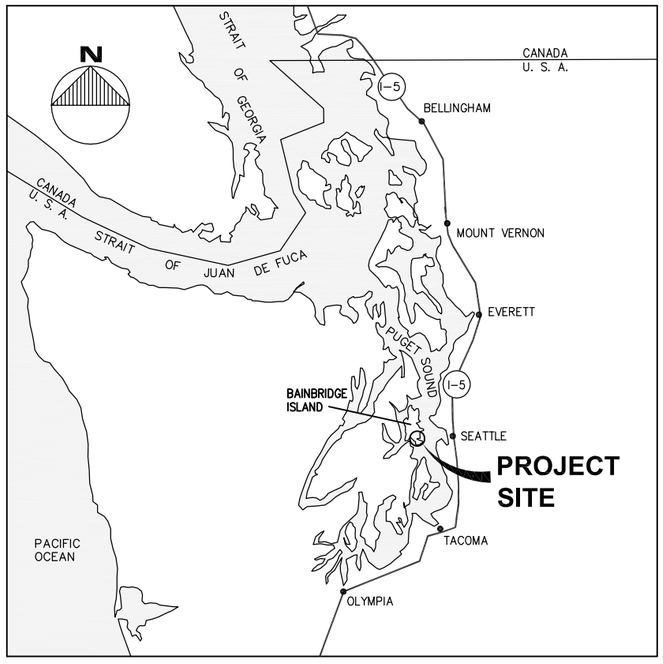

VICINITY MAP

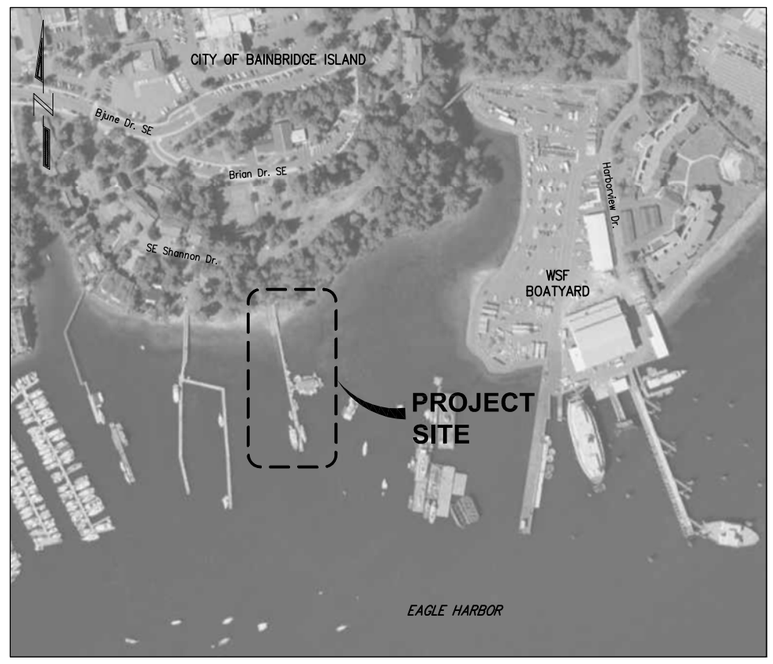

SITE MAP

SHEET INDEX	No.
TITLE SHEET AND INDEX	C1
EXISTING SITE AND PROJECT CONTROL PLAN	C2
EXISTING SITE DEMOLITION PLAN	C3
EXISTING DOCK DEMOLITION PLAN	C4
PROPOSED PLAN AND PROFILE	C5
DETAILS	C6
PRECAST PLANK AND RAIL DETAILS	C7
BOARDING FLOAT DETAILS	C8
MOORING FLOAT DETAILS	C9
BULLRAIL DETAILS	C10
LOW FREEBOARD FLOAT DETAILS	C11
UTILITY DETAILS	C12
UTILITY DETAILS	C13
ELECTRICAL SYMBOLS AND ABBREVIATIONS	E1
SINGLE LINE WIRING DIAGRAM	E2
ELECTRICAL SITE PLAN - NORTH	E3
ELECTRICAL SITE PLAN - SOUTH	E4
PRODUCT INFORMATION DETAILS	E5
DETAILS	E6

DATUM

ELEVATION DATUM FOR THIS PROJECT IS 0.0' MEAN LOWER LOW WATER (MLLW)

TIDAL DATA

BASED ON WASHINGTON DEPARTMENT OF ECOLOGY'S PUBLICATION "WASHINGTON STATE TIDAL AND TERRESTRIAL DATUM PLANES", DATED SEPTEMBER 1994. THE RELATIONSHIP BETWEEN NGVD 1929 AND MLLW DATUMS FOR PORT BLAKELY, NORTH PUGET SOUND IS AS FOLLOWS:

HIGHEST RECORDED TIDE ESTIMATE (EHW)	+15.00'
MEAN HIGHER HIGH WATER (MHHW)	+11.50'
MEAN HIGH WATER (MHW)	+10.60'
N.G.V.D. 1929	+6.12
MEAN LOW WATER (MLW)	+2.80
MEAN LOWER LOW WATER (MLLW)	0.00'
LOWEST RECORDED TIDE (ESTIMATED)	-4.50'

90% SUBMITTAL

PND ENGINEERS, INC.
1736 Fourth Avenue S., Suite A
Seattle, Washington 98134
P: 206.624.1387
www.pndengineers.com

DIGITAL SIGNATURE:

THIS DRAWING SET WAS CREATED AS AN ELECTRONIC DOCUMENT. IF THE ELECTRONIC DOCUMENT DOES NOT INCLUDE A VERIFIABLE DIGITAL SIGNATURE IN THE BOX ABOVE, PLEASE CONTACT THE ENGINEER OF RECORD FOR THE ORIGINAL CERTIFIED ELECTRONIC DOCUMENT.

PND ENGINEERS, INC. IS NOT RESPONSIBLE FOR SAFETY PROGRAMS, METHODS OR PROCEDURES OF OPERATION, OR THE CONSTRUCTION OF THE DESIGN SHOWN ON THESE DRAWINGS. WHERE SPECIFICATIONS ARE GENERAL OR NOT CALLED OUT, THE SPECIFICATIONS SHALL CONFORM TO STANDARDS OF INDUSTRY. DRAWINGS ARE FOR USE ON THIS PROJECT ONLY AND ARE NOT INTENDED FOR REUSE WITHOUT WRITTEN APPROVAL FROM PND. DRAWINGS ARE ALSO NOT TO BE USED IN ANY MANNER THAT WOULD CONSTITUTE A DETRIMENT DIRECTLY OR INDIRECTLY TO PND.

REVISIONS		
REV	DATE	DESCRIPTION

PROJECT: CITY OF BAINBRIDGE ISLAND WATERFRONT DOCK RENOVATION

TITLE: TITLE SHEET AND INDEX

DESIGNED BY:	NA	PROJECT NO:	154022.01	SHEET NO:	C1 OF 19
DRAWN BY:	DM	DATE:	MARCH 2016		
CHECKED BY:		SCALE:	NOTED		

3/2/2016
K:\2015\154022 - BAINBRIDGE IS CITY DOCK IMPROVEMENTS\90% SUBMITTAL\154022.01-C1.DWG

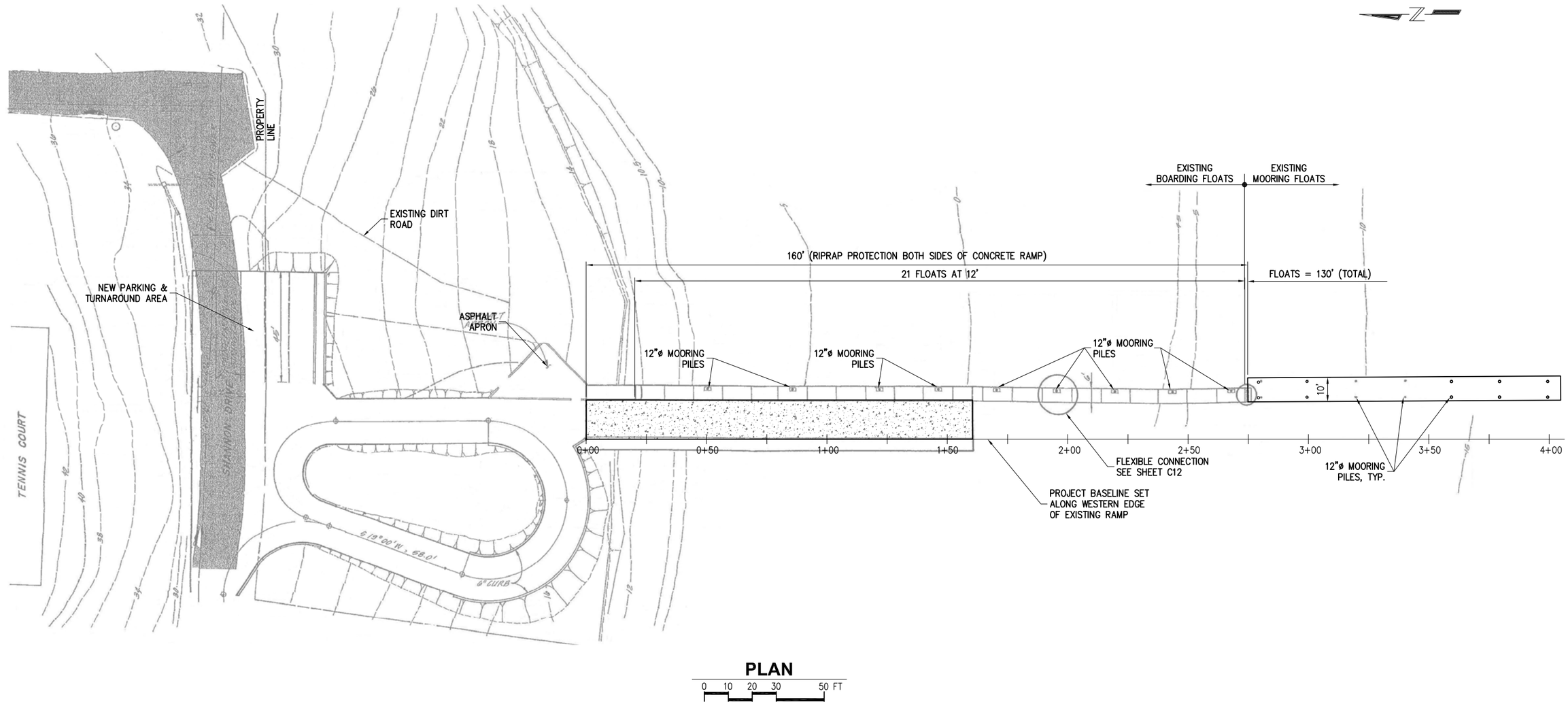

PLAN

0 10 20 30 50 FT

NOTE:
EXISTING SITE PLAN DRAWING IS TAKEN FROM REID MIDDLETON & ASSOCIATES CITY OF WINSLOW – WATERFRONT PARK IMPROVEMENT DRAWIING C3 (DECEMBER, 1985). ACTUAL SITE LOCATIONS MAY VARY.

90% SUBMITTAL

PND ENGINEERS, INC.
1736 Fourth Avenue S., Suite A
Seattle, Washington 98134
P: 206.624.1387
www.pndengineers.com

PND ENGINEERS, INC. IS NOT RESPONSIBLE FOR SAFETY PROGRAMS, METHODS OR PROCEDURES OF OPERATION, OR THE CONSTRUCTION OF THE DESIGN SHOWN ON THESE DRAWINGS. WHERE SPECIFICATIONS ARE GENERAL OR NOT CALLED OUT, THE SPECIFICATIONS SHALL CONFORM TO STANDARDS OF INDUSTRY. DRAWINGS ARE FOR USE ON THIS PROJECT ONLY AND ARE NOT INTENDED FOR REUSE WITHOUT WRITTEN APPROVAL FROM PND. DRAWINGS ARE ALSO NOT TO BE USED IN ANY MANNER THAT WOULD CONSTITUTE A DETRIMENT DIRECTLY OR INDIRECTLY TO PND.

REVISIONS

REV	DATE	DESCRIPTION

PROJECT: **CITY OF BAINBRIDGE ISLAND WATERFRONT DOCK RENOVATION**

TITLE: **EXISTING SITE AND PROJECT CONTROL PLAN**

DESIGNED BY:	NA	PROJECT NO:	154022.01	SHEET NO:	C2 OF 19
DRAWN BY:	DM	DATE:	MARCH 2016		
CHECKED BY:		SCALE:	NOTED		

3/2/2016
K:\2015\154022 – BAINBRIDGE IS CITY DOCK IMPROVEMENTS\90% SUBMITTAL\154022.01-C2.DWG

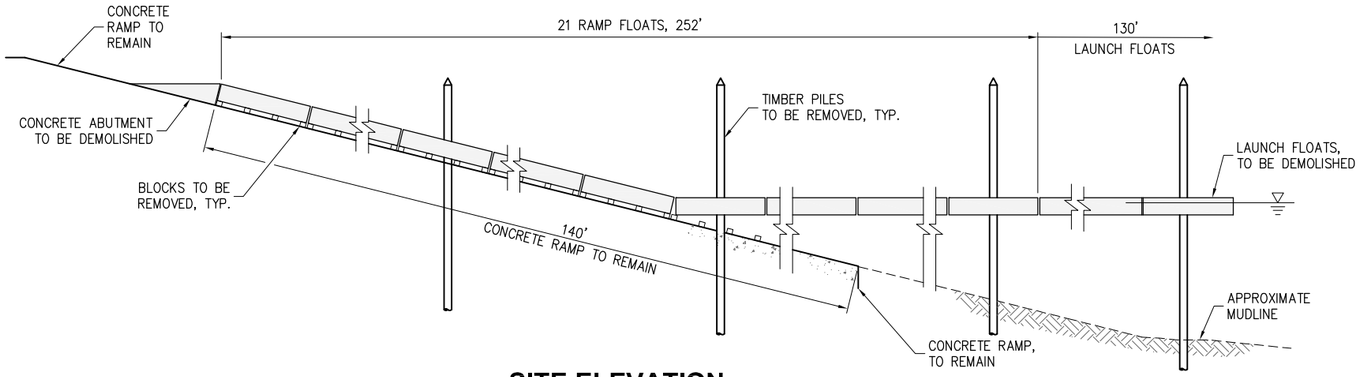

SITE ELEVATION

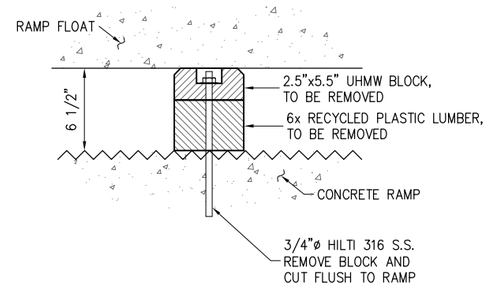

SUPPORT BLOCK TYPE 1

(APPROX. 16 TOTAL)

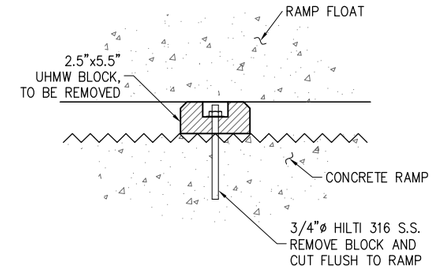

SUPPORT BLOCK TYPE 2

(APPROX. 6 TOTAL)

RAMP FLOAT

NOTE: DEMOLISH ALL ITEMS

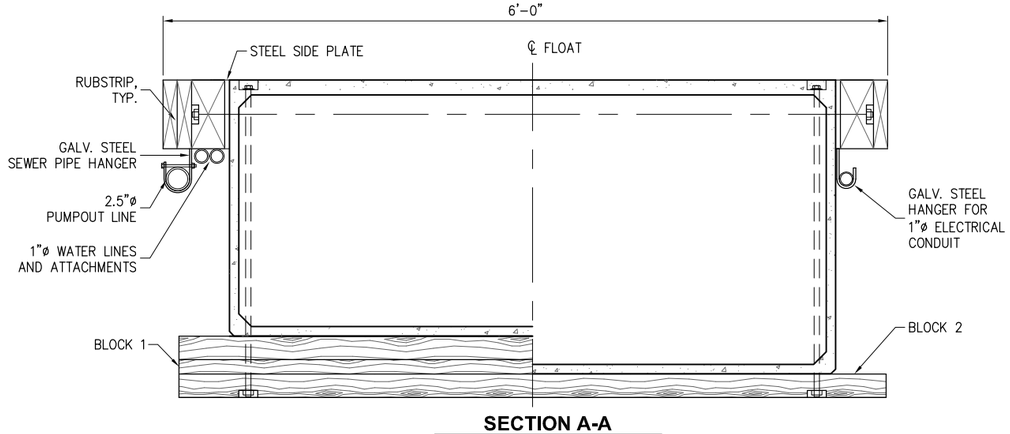

SECTION A-A

EXISTING RAMP FLOAT

90% SUBMITTAL

PND ENGINEERS, INC.
1736 Fourth Avenue S., Suite A
Seattle, Washington 98134
P: 206.624.1387
www.pndengineers.com

PND ENGINEERS, INC. IS NOT RESPONSIBLE FOR SAFETY PROGRAMS, METHODS OR PROCEDURES OF OPERATION, OR THE CONSTRUCTION OF THE DESIGN SHOWN ON THESE DRAWINGS. WHERE SPECIFICATIONS ARE GENERAL OR NOT CALLED OUT, THE SPECIFICATIONS SHALL CONFORM TO STANDARDS OF INDUSTRY. DRAWINGS ARE FOR USE ON THIS PROJECT ONLY AND ARE NOT INTENDED FOR REUSE WITHOUT WRITTEN APPROVAL FROM PND. DRAWINGS ARE ALSO NOT TO BE USED IN ANY MANNER THAT WOULD CONSTITUTE A DETRIMENT DIRECTLY OR INDIRECTLY TO PND.

REVISIONS

REV	DATE	DESCRIPTION

PROJECT: **CITY OF BAINBRIDGE ISLAND WATERFRONT DOCK RENOVATION**

TITLE: **EXISTING SITE DEMOLITION PLAN**

DESIGNED BY:	NA	PROJECT NO:	154022.01	SHEET NO:	C3 OF 19
DRAWN BY:	DM	DATE:	MARCH 2016		
CHECKED BY:		SCALE:	NOTED		

3/2/2016
K:\2015\154022 - BAINBRIDGE IS CITY DOCK IMPROVEMENTS\90% SUBMITTAL\154022.01-C3.DWG

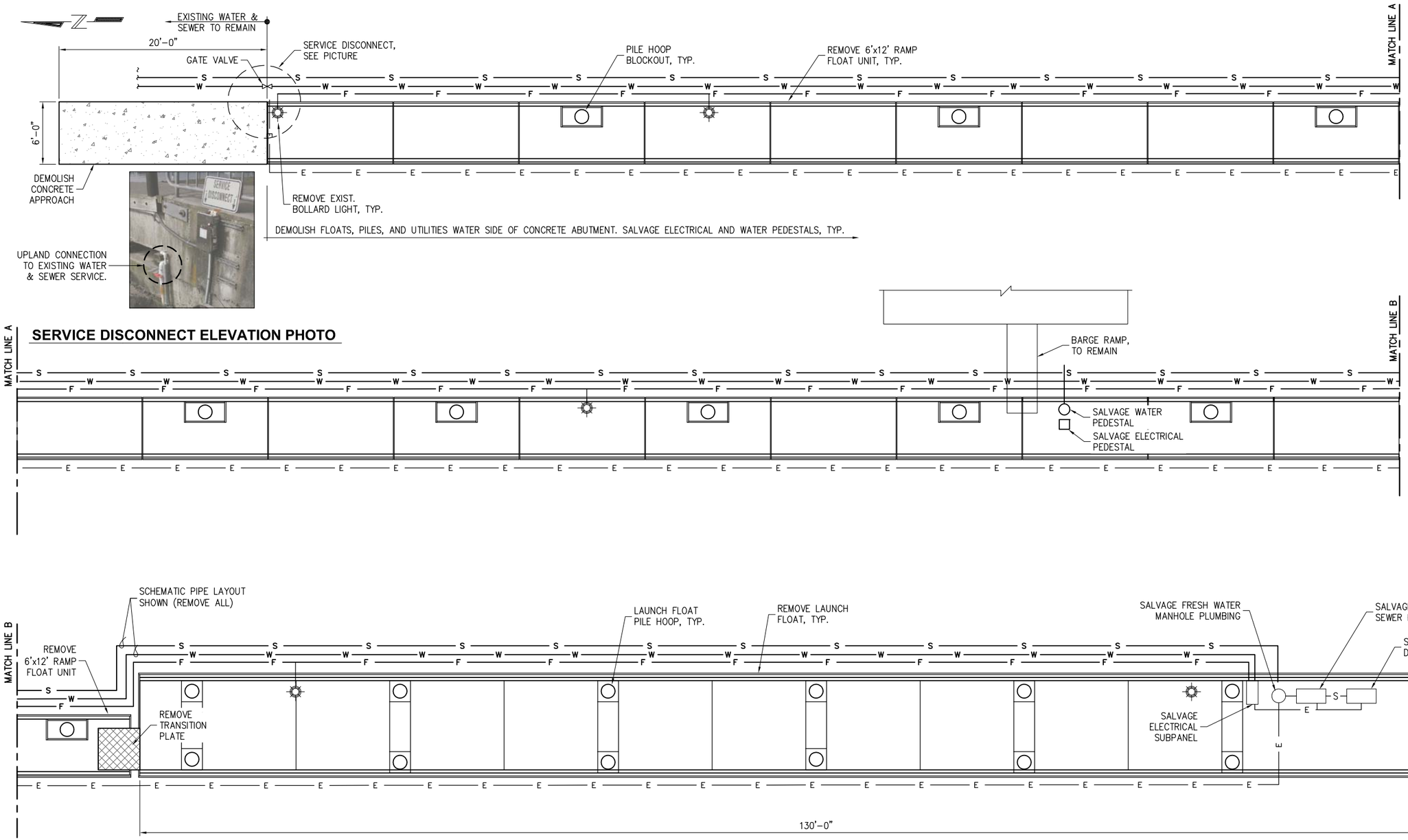

PLAN

0 2.5 5 10 15 FT.

90% SUBMITTAL

P N D ENGINEERS, INC.
1736 Fourth Avenue S., Suite A
Seattle, Washington 98134
P: 206.624.1387
www.pndengineers.com

PND ENGINEERS, INC. IS NOT RESPONSIBLE FOR SAFETY PROGRAMS, METHODS OR PROCEDURES OF OPERATION, OR THE CONSTRUCTION OF THE DESIGN SHOWN ON THESE DRAWINGS. WHERE SPECIFICATIONS ARE GENERAL OR NOT CALLED OUT, THE SPECIFICATIONS SHALL CONFORM TO STANDARDS OF INDUSTRY. DRAWINGS ARE FOR USE ON THIS PROJECT ONLY AND ARE NOT INTENDED FOR REUSE WITHOUT WRITTEN APPROVAL FROM PND. DRAWINGS ARE ALSO NOT TO BE USED IN ANY MANNER THAT WOULD CONSTITUTE A DETRIMENT DIRECTLY OR INDIRECTLY TO PND.

REVISIONS

REV	DATE	DESCRIPTION

PROJECT: **CITY OF BAINBRIDGE ISLAND WATERFRONT DOCK RENOVATION**

TITLE: **EXISTING DOCK DEMOLISH PLAN**

DESIGNED BY:	NA	PROJECT NO:	154022.01	SHEET NO:	C4 OF 19
DRAWN BY:	DM	DATE:	MARCH 2016		
CHECKED BY:		SCALE:	NOTED		

3/2/2016
K:\2015\154022 - BAINBRIDGE IS CITY DOCK IMPROVEMENTS\90% SUBMITTAL\154022.01-C4.DWG

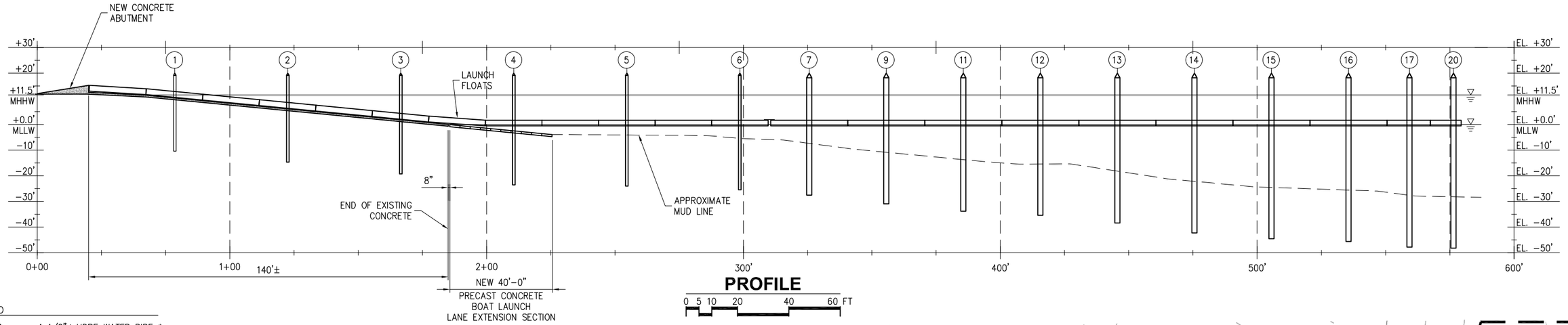

PROFILE

0 5 10 20 40 60 FT

LEGEND

- W — 1 1/2"ø HDPE WATER PIPE *
- S — 3"ø HDPE FORCE PIPE
- F — 4"ø FIRE PIPE **
- BULLRAIL
- HOSE BIB, ON ELECTRICAL PEDESTAL, SEE SHEET E4
- SEWER PUMPOUT STANCHION AND DUMP STATION, SEE SHEET C13
- STANDPIPE CONNECTION, SEE SHEET C12
- LR/FE LIFE RING/ FIRE EXTINGUISHER CABINET
- L LADDER

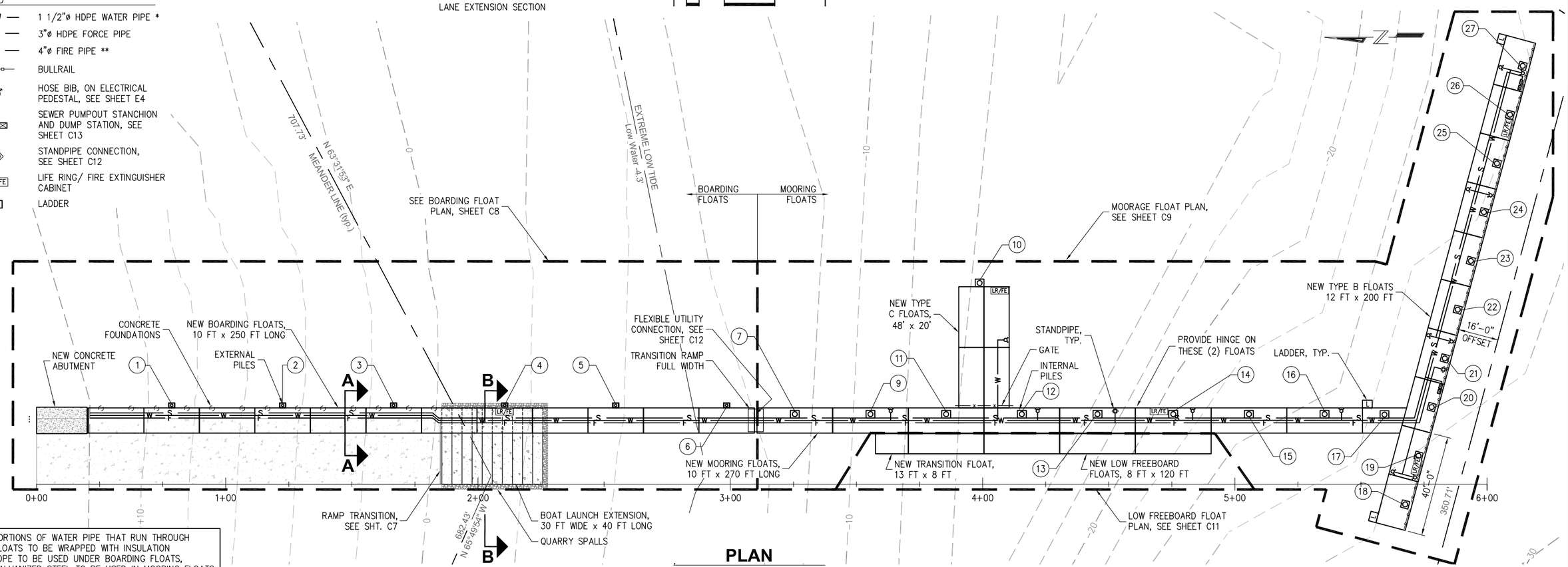

PLAN

0 5 10 20 40 60 FT

* PORTIONS OF WATER PIPE THAT RUN THROUGH FLOATS TO BE WRAPPED WITH INSULATION

** HDPE TO BE USED UNDER BOARDING FLOATS, GALVANIZED STEEL TO BE USED IN MOORING FLOATS

90% SUBMITTAL

PND ENGINEERS, INC.

1736 Fourth Avenue S., Suite A
Seattle, Washington 98134
P: 206.624.1387
www.pndengineers.com

PND ENGINEERS, INC. IS NOT RESPONSIBLE FOR SAFETY PROGRAMS, METHODS OR PROCEDURES OF OPERATION, OR THE CONSTRUCTION OF THE DESIGN SHOWN ON THESE DRAWINGS. WHERE SPECIFICATIONS ARE GENERAL OR NOT CALLED OUT, THE SPECIFICATIONS SHALL CONFORM TO STANDARDS OF INDUSTRY. DRAWINGS ARE FOR USE ON THIS PROJECT ONLY AND ARE NOT INTENDED FOR REUSE WITHOUT WRITTEN APPROVAL FROM PND. DRAWINGS ARE ALSO NOT TO BE USED IN ANY MANNER THAT WOULD CONSTITUTE A DETRIMENT DIRECTLY OR INDIRECTLY TO PND.

REVISIONS

REV	DATE	DESCRIPTION

PROJECT: **CITY OF BAINBRIDGE ISLAND WATERFRONT DOCK RENOVATION**

TITLE: **PROPOSED PLAN AND PROFILE**

DESIGNED BY:	NA	PROJECT NO:	154022.01	SHEET NO:	C5 OF 19
DRAWN BY:	DM	DATE:	MARCH 2016		
CHECKED BY:		SCALE:	NOTED		

3/8/2016
K:\2015\154022 – BAINBRIDGE IS CITY DOCK IMPROVEMENTS\90% SUBMITTAL\154022.01-C5.DWG

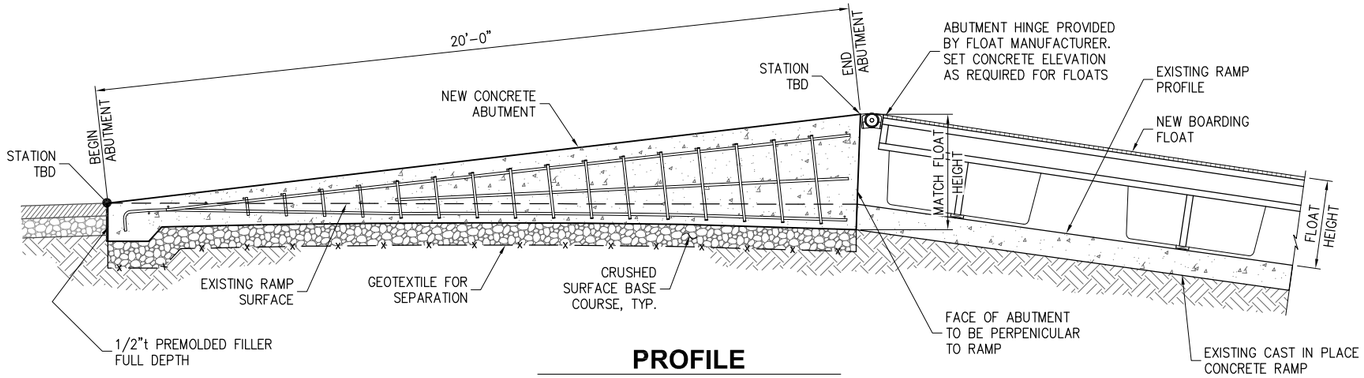

PROFILE

0 1 2 4 6 FT.

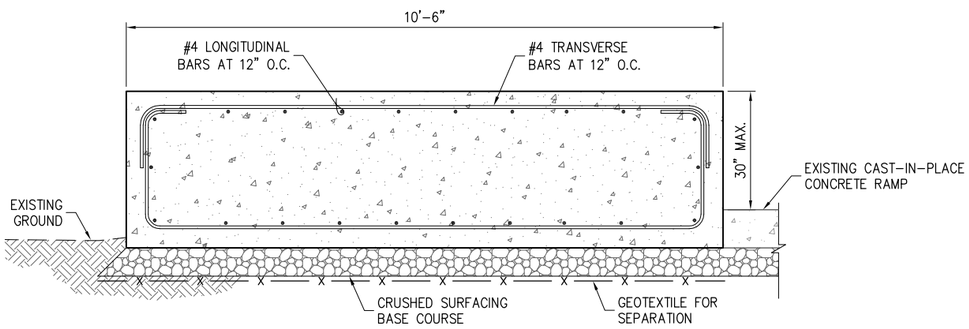

ABUTMENT CROSS SECTION

0 1 2 3 4 FT.

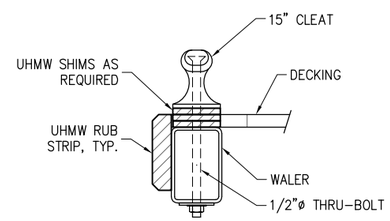

NOTE:
CLEAT TO BE INSTALLED ON MOORING FLOATS ONLY @ 10'-0" O.C.

TYPICAL CLEAT

NTS

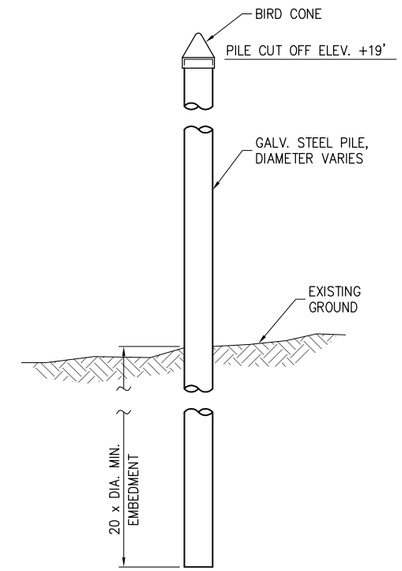

BOARDING AND MOORING FLOAT PILE ELEVATION

NTS

PILE SCHEDULE					
PILE I.D.	DIAMETER (IN.)	THICKNESS (IN.)	LENGTH (FT.)	STATION	OFFSET
1	12	0.5	45		
2	12	0.5	45		
3	12	0.5	50		
4	12	0.5	55		
5	12	0.5	55		
6	12	0.5	60		
7	24	0.75	75		
8	NOT USED				
9	24	0.75	80		
10	24	0.75	80		
11	24	0.75	80		
12	24	0.75	80		
13	24	0.75	85		
14	24	0.75	90		
15	24	0.75	90		
16	24	0.75	90		
17	24	0.75	95		
18	24	0.75	95		
19	24	0.75	95		
20	24	0.75	95		
21	24	0.75	95		
22	24	0.75	95		
23	24	0.75	95		
24	24	0.75	95		
25	24	0.75	95		
26	24	0.75	95		
27	24	0.75	95		

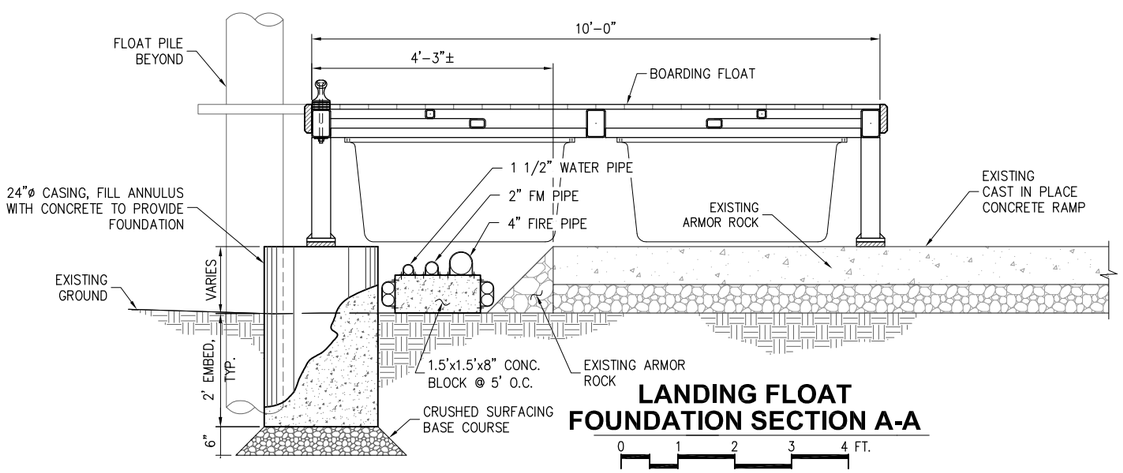

LANDING FLOAT FOUNDATION SECTION A-A

0 1 2 3 4 FT.

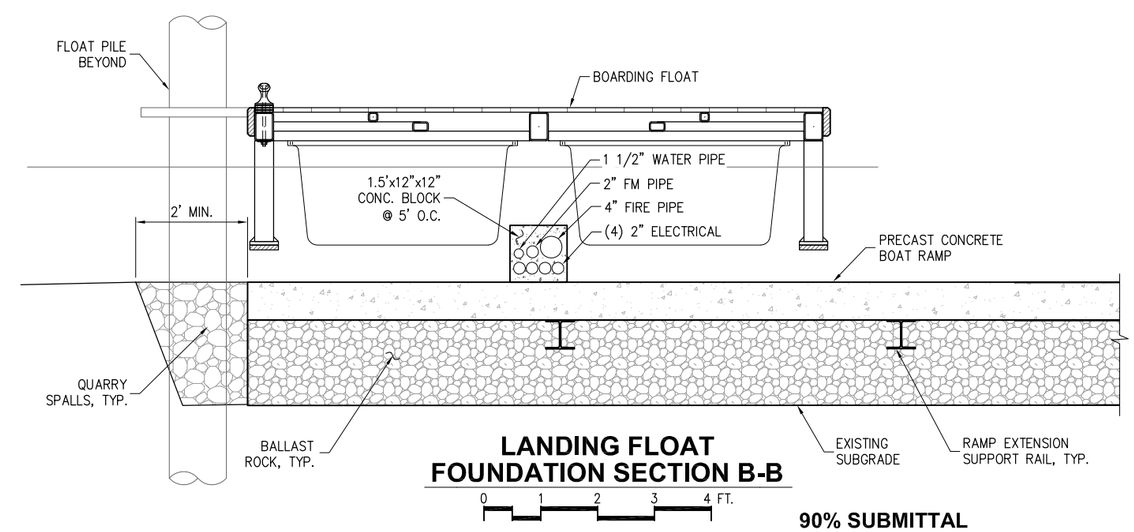

LANDING FLOAT FOUNDATION SECTION B-B

0 1 2 3 4 FT.

90% SUBMITTAL

P N D ENGINEERS, INC.
1736 Fourth Avenue S., Suite A
Seattle, Washington 98134
P: 206.624.1387
www.pndengineers.com

PND ENGINEERS, INC. IS NOT RESPONSIBLE FOR SAFETY PROGRAMS, METHODS OR PROCEDURES OF OPERATION, OR THE CONSTRUCTION OF THE DESIGN SHOWN ON THESE DRAWINGS. WHERE SPECIFICATIONS ARE GENERAL OR NOT CALLED OUT, THE SPECIFICATIONS SHALL CONFORM TO STANDARDS OF INDUSTRY. DRAWINGS ARE FOR USE ON THIS PROJECT ONLY AND ARE NOT INTENDED FOR REUSE WITHOUT WRITTEN APPROVAL FROM PND. DRAWINGS ARE ALSO NOT TO BE USED IN ANY MANNER THAT WOULD CONSTITUTE A DETRIMENT DIRECTLY OR INDIRECTLY TO PND.

REVISIONS

REV	DATE	DESCRIPTION

PROJECT: CITY OF BAINBRIDGE ISLAND WATERFRONT DOCK RENOVATION

TITLE: DETAILS

DESIGNED BY:	NA	PROJECT NO:	154022.01	SHEET NO:
DRAWN BY:	DM	DATE:	MARCH 2016	C6 OF 19
CHECKED BY:		SCALE:	NOTED	

3/8/2016
K:\2015\154022 - BAINBRIDGE IS CITY DOCK IMPROVEMENTS\90% SUBMITTAL\154022.01-C6.DWG

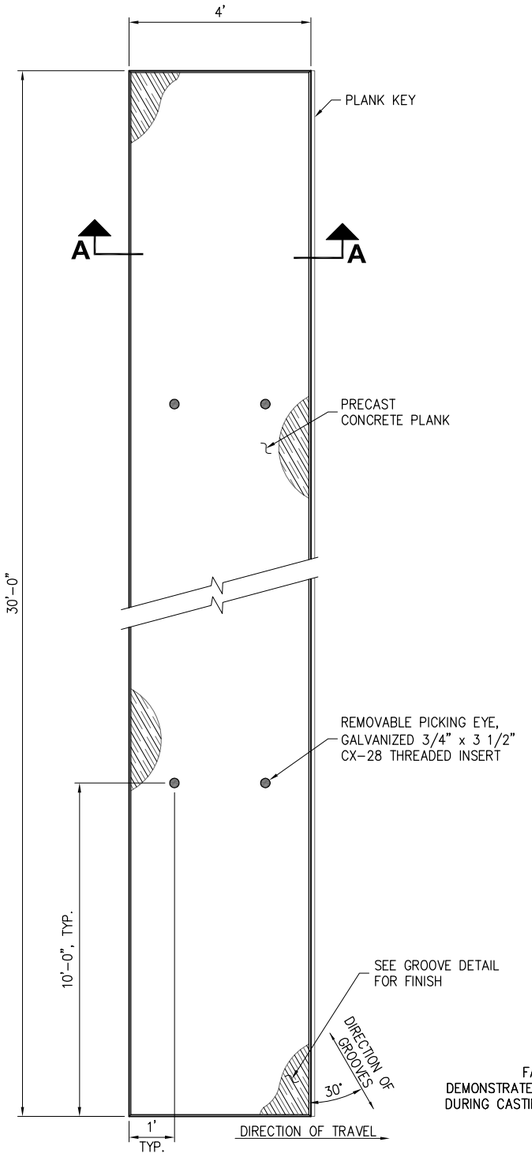

PRECAST CONCRETE PLANK PLAN

NOT TO SCALE

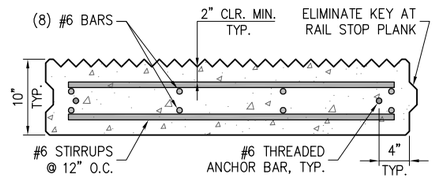

SECTION A-A

NOT TO SCALE

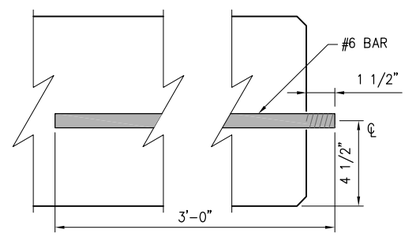

THREADED ANCHOR DETAIL

NOT TO SCALE

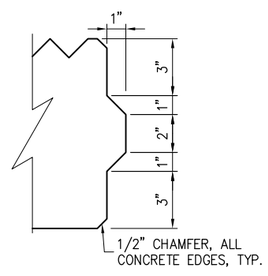

PLANK KEY DETAIL

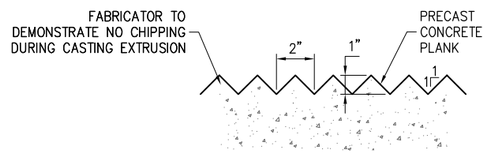

GROOVE DETAIL

NOT TO SCALE

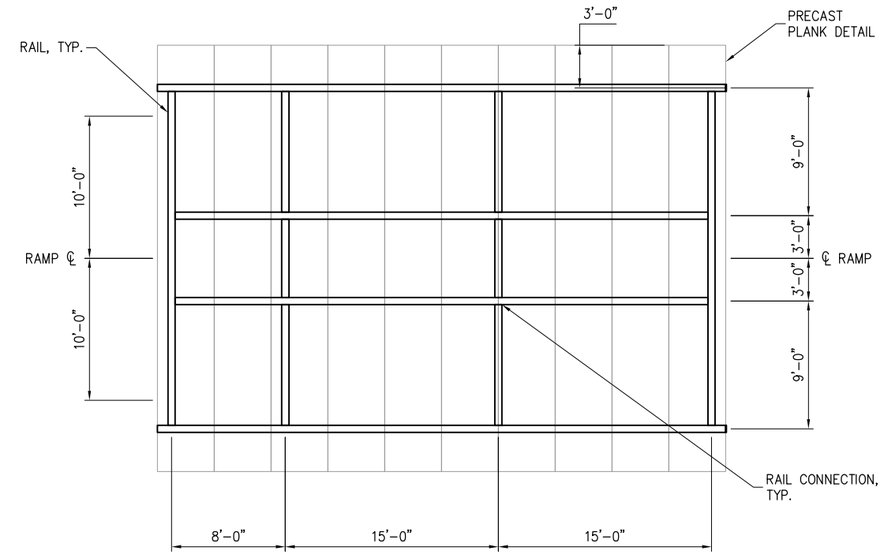

PRECAST RAMP LAYOUT

SCALE 3/16" = 1'

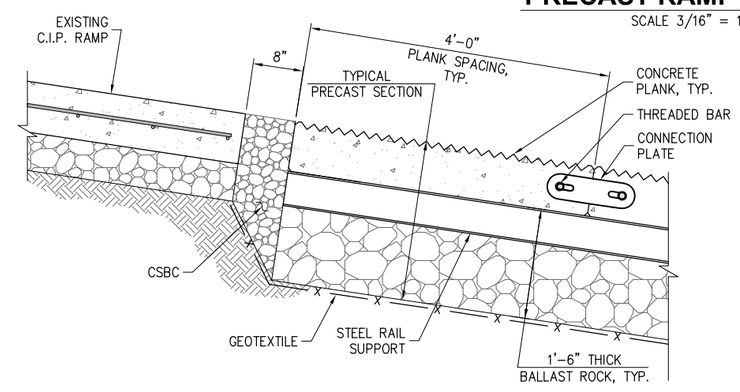

C.I.P. SLAB TO PRECAST PLANK TRANSITION SECTION AND CONNECTION DETAIL

NOT TO SCALE

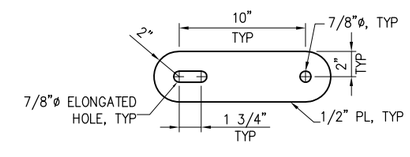

CONNECTION PLATE DETAIL

NOT TO SCALE

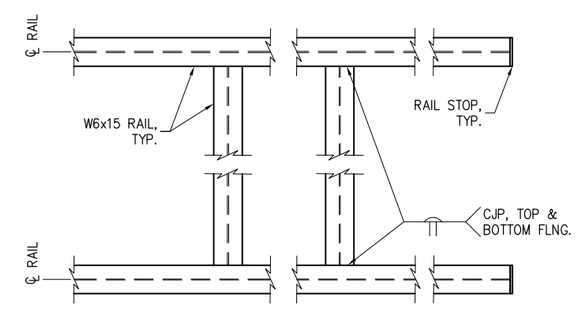

RAIL CONNECTION

NOT TO SCALE

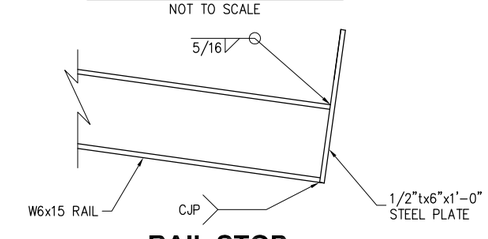

RAIL STOP

NOT TO SCALE

90% SUBMITTAL

P N D ENGINEERS, INC.
1736 Fourth Avenue S., Suite A
Seattle, Washington 98134
P: 206.624.1387
www.pndengineers.com

PND ENGINEERS, INC. IS NOT RESPONSIBLE FOR SAFETY PROGRAMS, METHODS OR PROCEDURES OF OPERATION, OR THE CONSTRUCTION OF THE DESIGN SHOWN ON THESE DRAWINGS. WHERE SPECIFICATIONS ARE GENERAL OR NOT CALLED OUT, THE SPECIFICATIONS SHALL CONFORM TO STANDARDS OF INDUSTRY. DRAWINGS ARE FOR USE ON THIS PROJECT ONLY AND ARE NOT INTENDED FOR REUSE WITHOUT WRITTEN APPROVAL FROM PND. DRAWINGS ARE ALSO NOT TO BE USED IN ANY MANNER THAT WOULD CONSTITUTE A DETRIMENT DIRECTLY OR INDIRECTLY TO PND.

REVISIONS

REV	DATE	DESCRIPTION

PROJECT: **CITY OF BAINBRIDGE ISLAND WATERFRONT DOCK RENOVATION**

TITLE: **PRECAST PLANK AND RAIL DETAILS**

DESIGNED BY:	NA	PROJECT NO:	154022.01	SHEET NO:	C7 OF 19
DRAWN BY:	DM	DATE:	MARCH 2016		
CHECKED BY:		SCALE:	NOTED		

3/2/2016
K:\2015\154022 - BAINBRIDGE IS CITY DOCK IMPROVEMENTS\90% SUBMITTAL\154022.01-C7.DWG

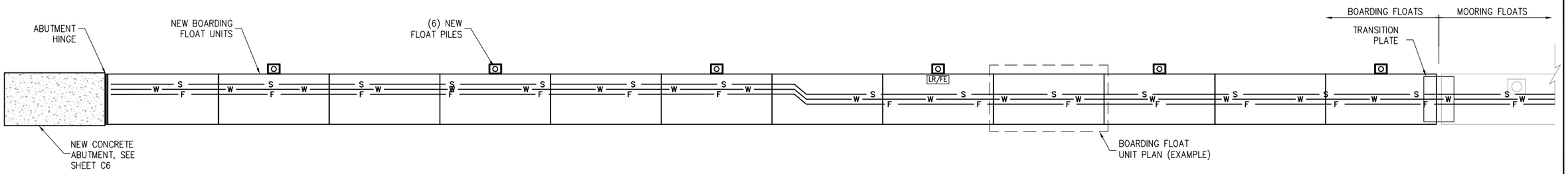

BOARDING FLOAT PLAN

0 5 10 20 30 FT.

LEGEND

- W — 1 1/2"ø HDPE WATER PIPE *
- S — 3"ø HDPE FORCE PIPE
- F — 4"ø FIRE PIPE **
- HOSE BIB, ON ELECTRICAL PEDESTAL, SEE SHEET E4
- SEWER PUMPOUT STANCHION AND DUMP STATION, SEE SHEET C13
- STANDPIPE CONNECTION, SEE SHEET C12
- LR/FE — LIFE RING/ FIRE EXTINGUISHER CABINET
- L — LADDER

* PORTIONS OF WATER PIPE THAT RUN THROUGH FLOATS TO BE WRAPPED WITH INSULATION
** HDPE TO BE USED UNDER BOARDING FLOATS, GALVANIZED STEEL TO BE USED IN MOORING FLOATS

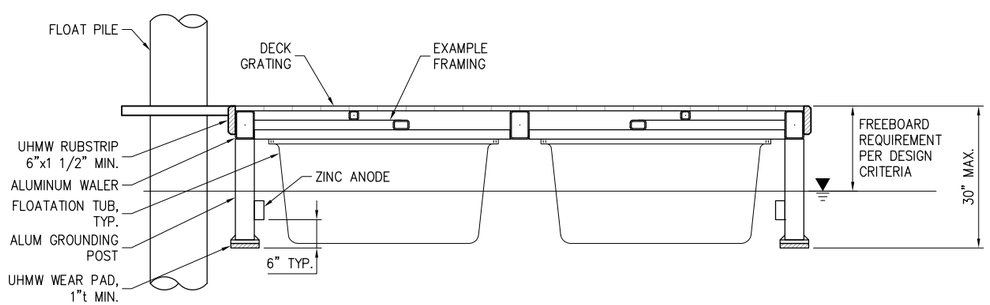

EXAMPLE BOARDING FLOAT UNIT SECTION

0 1 2 3 4 FT.

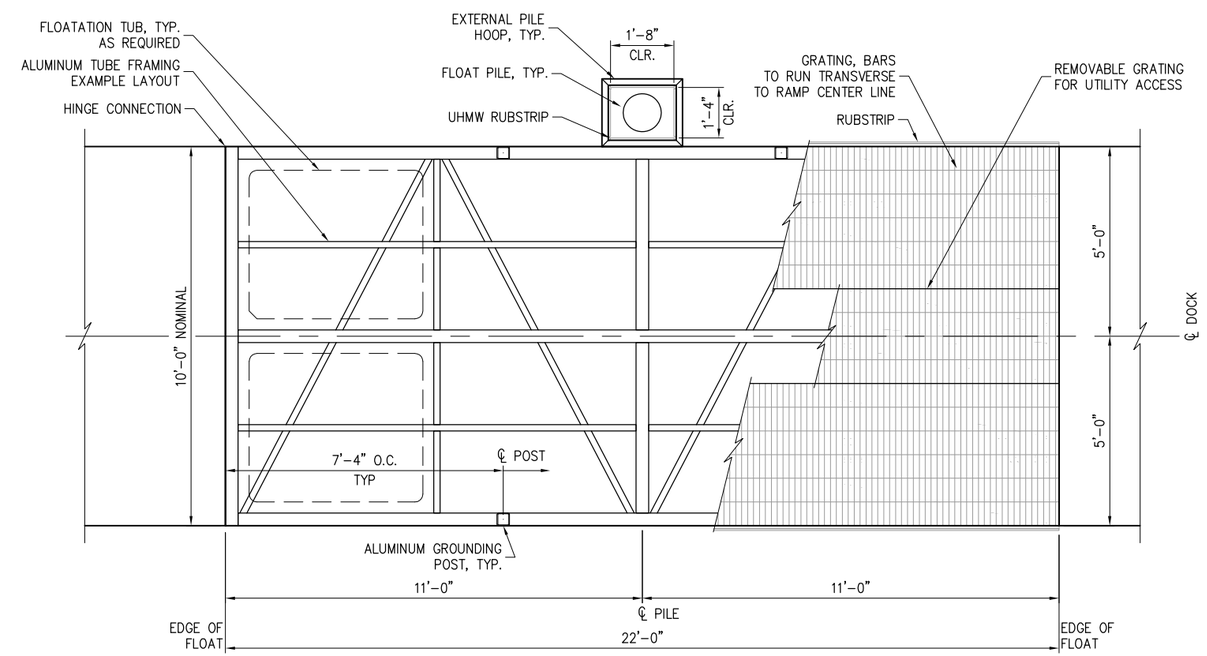

EXAMPLE BOARDING FLOAT UNIT PLAN

0 1 2 4 6 FT.

90% SUBMITTAL

PND ENGINEERS, INC.
1736 Fourth Avenue S., Suite A
Seattle, Washington 98134
P: 206.624.1387
www.pndengineers.com

PND ENGINEERS, INC. IS NOT RESPONSIBLE FOR SAFETY PROGRAMS, METHODS OR PROCEDURES OF OPERATION, OR THE CONSTRUCTION OF THE DESIGN SHOWN ON THESE DRAWINGS. WHERE SPECIFICATIONS ARE GENERAL OR NOT CALLED OUT, THE SPECIFICATIONS SHALL CONFORM TO STANDARDS OF INDUSTRY. DRAWINGS ARE FOR USE ON THIS PROJECT ONLY AND ARE NOT INTENDED FOR REUSE WITHOUT WRITTEN APPROVAL FROM PND. DRAWINGS ARE ALSO NOT TO BE USED IN ANY MANNER THAT WOULD CONSTITUTE A DETRIMENT DIRECTLY OR INDIRECTLY TO PND.

REVISIONS

REV	DATE	DESCRIPTION

PROJECT: **CITY OF BAINBRIDGE ISLAND WATERFRONT DOCK RENOVATION**

TITLE: **BOARDING FLOAT DETAILS**

DESIGNED BY:	NA	PROJECT NO:	154022.01	SHEET NO:	C8 OF 19
DRAWN BY:	DM	DATE:	MARCH 2016		
CHECKED BY:		SCALE:	NOTED		

3/8/2016
K:\2015\154022 - BAINBRIDGE IS CITY DOCK IMPROVEMENTS\90% SUBMITTAL\154022.01-C8.DWG

LEGEND

(X)	FLOAT TYPE DESIGNATION
— W —	1 1/2"ø HDPE WATER PIPE *
— S —	3"ø HDPE FORCE PIPE
— F —	4"ø FIRE PIPE **
	BULLRAIL
	HOSE BIB, ON ELECTRICAL PEDESTAL, SEE SHEET E4
	SEWER PUMPOUT STANCHION AND DUMP STATION, SEE SHEET C13
	STANDPIPE CONNECTION, SEE SHEET C12
LR/FE	LIFE RING/ FIRE EXTINGUISHER CABINET
L	LADDER

* PORTIONS OF WATER PIPE THAT RUN THROUGH FLOATS TO BE WRAPPED WITH INSULATION
** HDPE TO BE USED UNDER BOARDING FLOATS, GALVANIZED STEEL TO BE USED IN MOORING FLOATS

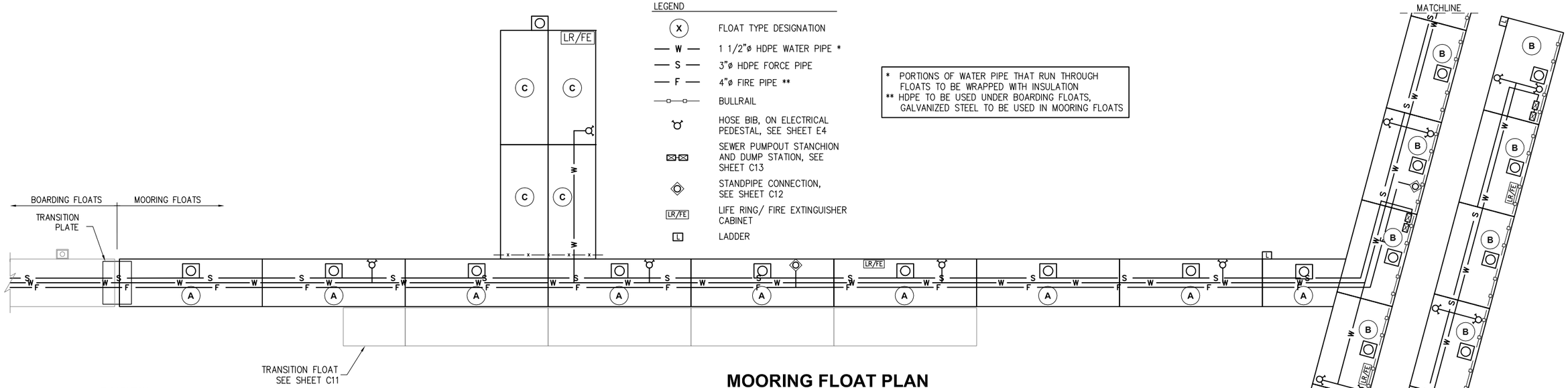

MOORING FLOAT PLAN

0 5 10 20 30 FT.

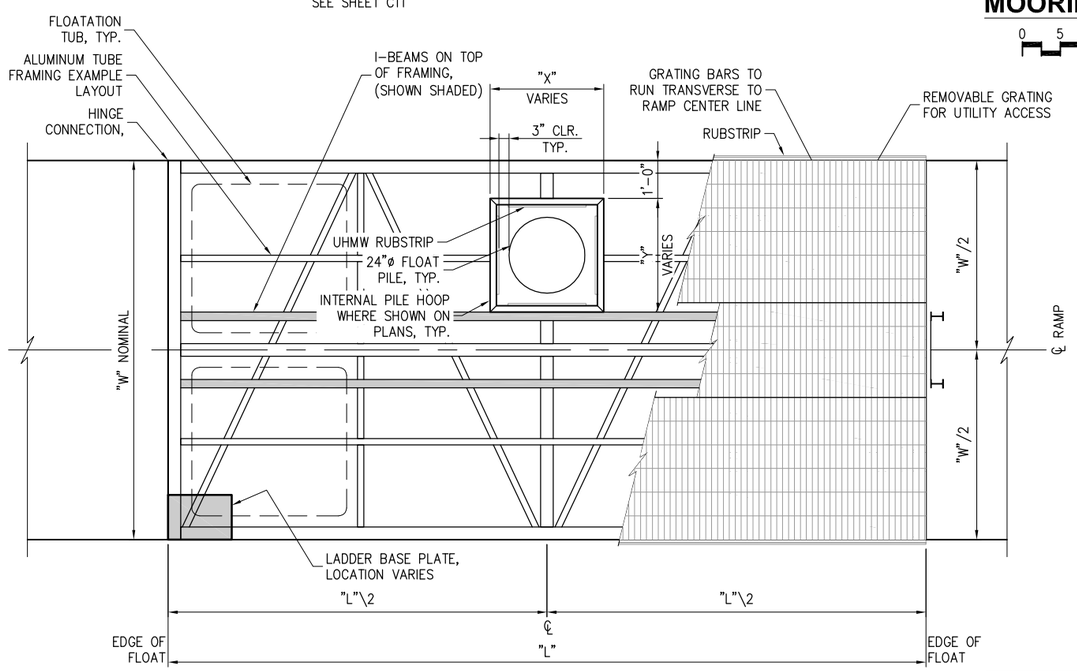

EXAMPLE MOORING FLOAT UNIT PLAN

0 1 2 4 6 FT.

TYPE	"W"	"X"	"Y"	"L"
TYPE A	10'-0"	3'-6"	3'-0"	30'-0"
TYPE B	12'-0"	3'-0"	3'-6"	20'-0"
TYPE C	10'-0"	3'-6"	3'-0"	24'-0"

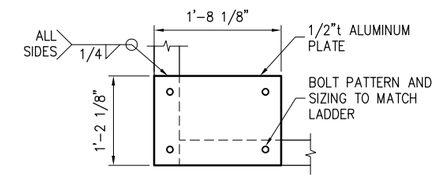

LADDER BASE PLATE DETAIL

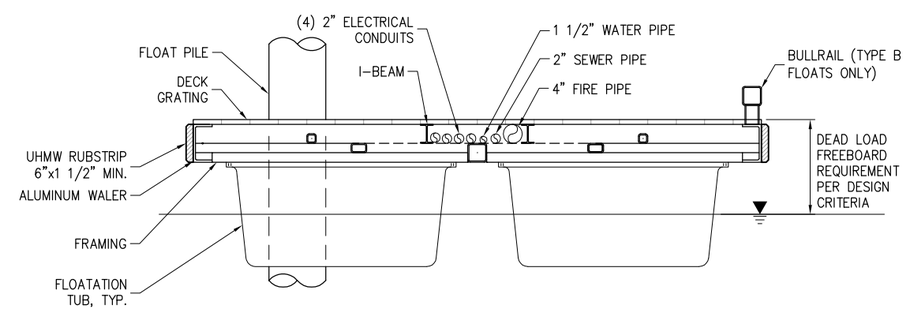

EXAMPLE MOORING FLOAT UNIT SECTION

0 1 2 3 4 FT.

90% SUBMITTAL

P N D ENGINEERS, INC.
1736 Fourth Avenue S., Suite A
Seattle, Washington 98134
P: 206.624.1387
www.pndengineers.com

PND ENGINEERS, INC. IS NOT RESPONSIBLE FOR SAFETY PROGRAMS, METHODS OR PROCEDURES OF OPERATION, OR THE CONSTRUCTION OF THE DESIGN SHOWN ON THESE DRAWINGS. WHERE SPECIFICATIONS ARE GENERAL OR NOT CALLED OUT, THE SPECIFICATIONS SHALL CONFORM TO STANDARDS OF INDUSTRY. DRAWINGS ARE FOR USE ON THIS PROJECT ONLY AND ARE NOT INTENDED FOR REUSE WITHOUT WRITTEN APPROVAL FROM PND. DRAWINGS ARE ALSO NOT TO BE USED IN ANY MANNER THAT WOULD CONSTITUTE A DETRIMENT DIRECTLY OR INDIRECTLY TO PND.

REVISIONS

REV	DATE	DESCRIPTION

PROJECT: **CITY OF BAINBRIDGE ISLAND WATERFRONT DOCK RENOVATION**

TITLE: **MOORING FLOAT DETAILS**

DESIGNED BY:	NA	PROJECT NO:	154022.01	SHEET NO:	C9 OF 19
DRAWN BY:	DM	DATE:	MARCH 2016		
CHECKED BY:		SCALE:	NOTED		

3/8/2016
K:\2015\154022 - BAINBRIDGE IS CITY DOCK IMPROVEMENTS\90% SUBMITTAL\154022.01-C9.DWG

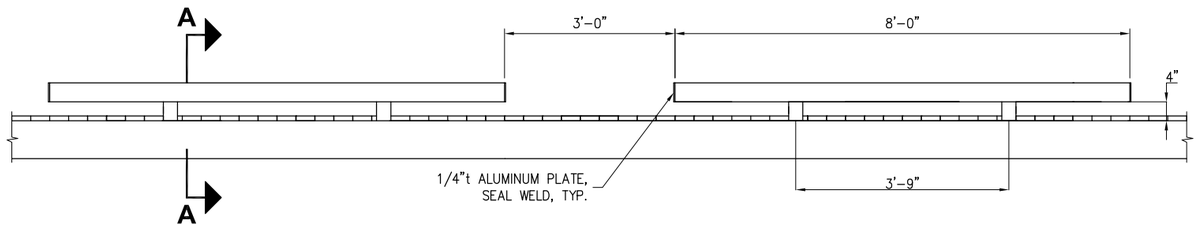

BULLRAIL ELEVATION

NTS

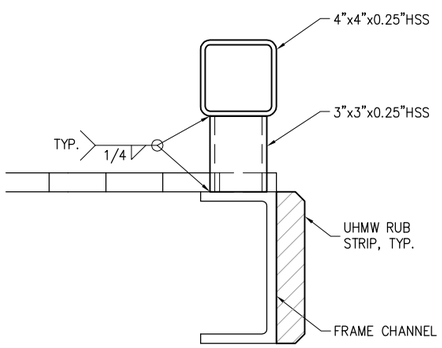

BULLRAIL SECTION A-A

NTS

3/8/2016
K:\2015\154022 - BAINBRIDGE IS CITY DOCK IMPROVEMENTS\90% SUBMITTAL\154022.01-C10.DWG

90% SUBMITTAL

P | N | D
ENGINEERS, INC.
1736 Fourth Avenue S., Suite A
Seattle, Washington 98134
P: 206.624.1387
www.pndengineers.com

PND ENGINEERS, INC. IS NOT RESPONSIBLE FOR SAFETY PROGRAMS, METHODS OR PROCEDURES OF OPERATION, OR THE CONSTRUCTION OF THE DESIGN SHOWN ON THESE DRAWINGS. WHERE SPECIFICATIONS ARE GENERAL OR NOT CALLED OUT, THE SPECIFICATIONS SHALL CONFORM TO STANDARDS OF INDUSTRY. DRAWINGS ARE FOR USE ON THIS PROJECT ONLY AND ARE NOT INTENDED FOR REUSE WITHOUT WRITTEN APPROVAL FROM PND. DRAWINGS ARE ALSO NOT TO BE USED IN ANY MANNER THAT WOULD CONSTITUTE A DETRIMENT DIRECTLY OR INDIRECTLY TO PND.

REVISIONS

REV	DATE	DESCRIPTION

PROJECT: **CITY OF BAINBRIDGE ISLAND WATERFRONT DOCK RENOVATION**

TITLE: **BULLRAIL DETAILS**

DESIGNED BY:	NA	PROJECT NO:	154022.01	SHEET NO:	C10 OF 19
DRAWN BY:	DM	DATE:	MARCH 2016		
CHECKED BY:		SCALE:	NOTED		

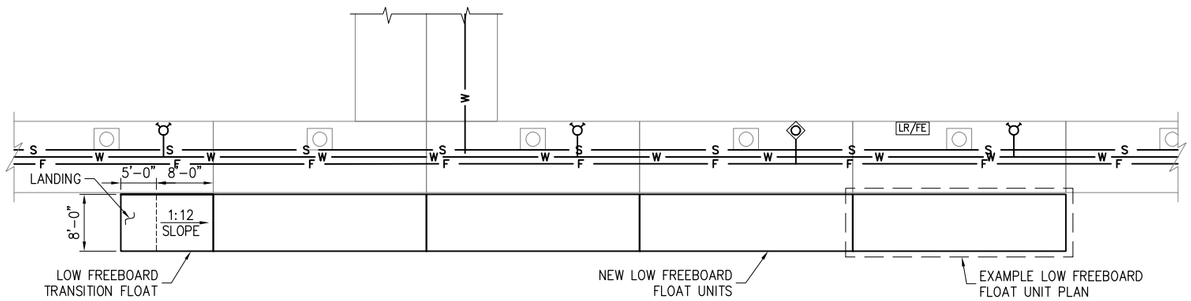

LOW FREEBOARD FLOAT PLAN

0 5 10 20 30 FT.

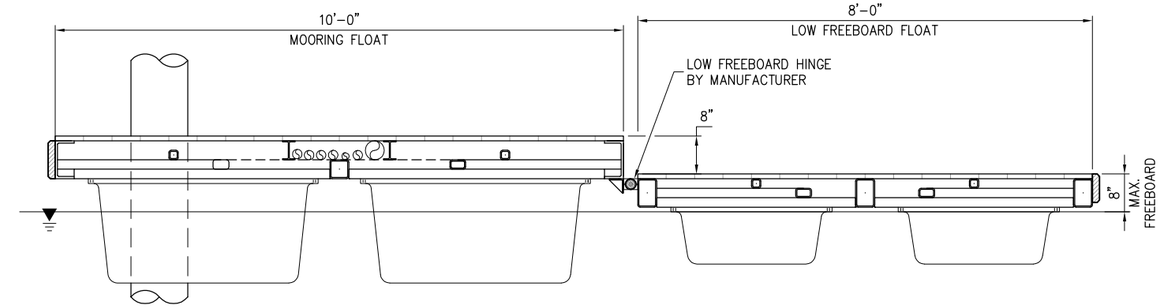

LOW FREEBOARD FLOAT SECTION

0 1 2 3 4 FT.

LEGEND

— W —	1 1/2"ø HDPE WATER PIPE *
— S —	3"ø HDPE FORCE PIPE
— F —	4"ø FIRE PIPE **
	HOSE BIB, ON ELECTRICAL PANEL, SEE SHEET E4
	SEWER PUMPOUT STANCHION AND DUMP STATION, SEE SHEET C10
	STANDPIPE CONNECTION, SEE SHEET C11
LR/FE	LIFE RING/ FIRE EXTINGUISHER CABINET
L	LADDER

* PORTIONS OF WATER PIPE THAT RUN THROUGH FLOATS TO BE WRAPPED WITH INSULATION
** HDPE TO BE USED UNDER BOARDING FLOATS, GALVANIZED STEEL TO BE USED IN MOORING FLOATS

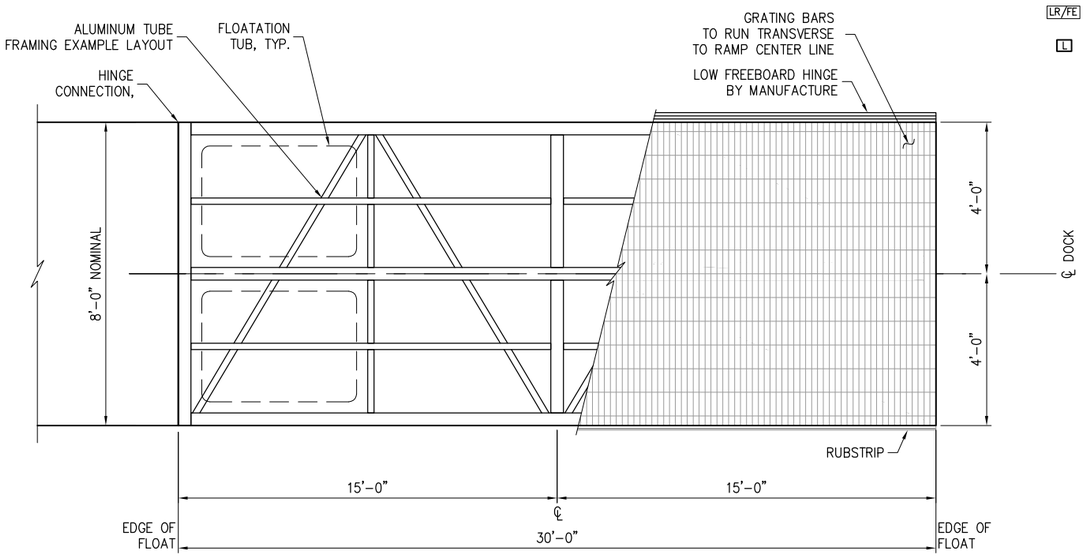

EXAMPLE LOW FREEBOARD FLOAT PLAN

0 1 2 4 6 FT.

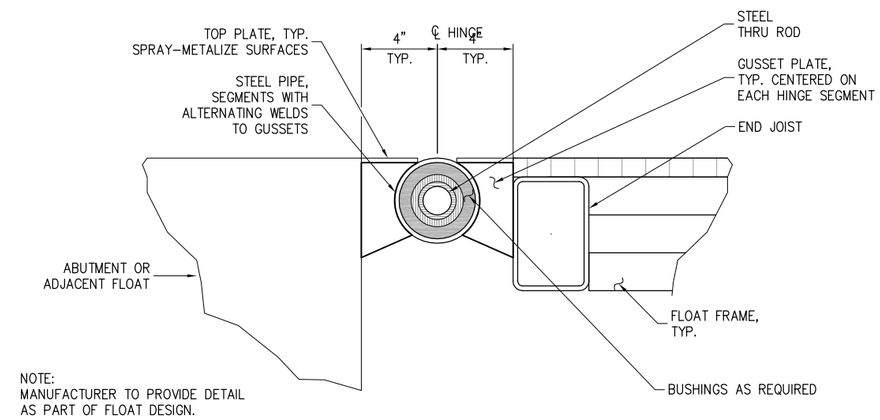

NOTE:
MANUFACTURER TO PROVIDE DETAIL AS PART OF FLOAT DESIGN.

EXAMPLE HINGE

NTS

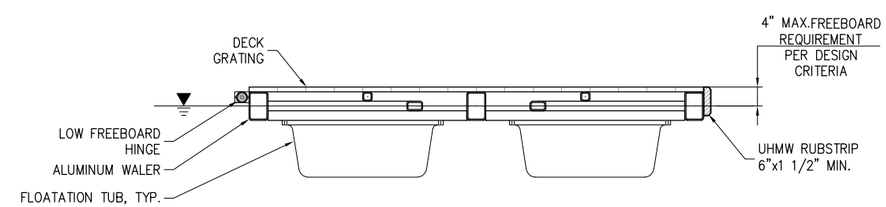

EXAMPLE LOW FREEBOARD FLOAT SECTION

0 1 2 3 4 FT.

90% SUBMITTAL

P N D ENGINEERS, INC.
1736 Fourth Avenue S., Suite A
Seattle, Washington 98134
P: 206.624.1387
www.pndengineers.com

PND ENGINEERS, INC. IS NOT RESPONSIBLE FOR SAFETY PROGRAMS, METHODS OR PROCEDURES OF OPERATION, OR THE CONSTRUCTION OF THE DESIGN SHOWN ON THESE DRAWINGS. WHERE SPECIFICATIONS ARE GENERAL OR NOT CALLED OUT, THE SPECIFICATIONS SHALL CONFORM TO STANDARDS OF INDUSTRY. DRAWINGS ARE FOR USE ON THIS PROJECT ONLY AND ARE NOT INTENDED FOR REUSE WITHOUT WRITTEN APPROVAL FROM PND. DRAWINGS ARE ALSO NOT TO BE USED IN ANY MANNER THAT WOULD CONSTITUTE A DETRIMENT DIRECTLY OR INDIRECTLY TO PND.

REVISIONS

REV	DATE	DESCRIPTION

CITY OF BAINBRIDGE ISLAND
WATERFRONT DOCK RENOVATION

TITLE: **LOW FREEBOARD FLOAT DETAILS**

DESIGNED BY:	NA	PROJECT NO:	154022.01	SHEET NO:	C11 OF 19
DRAWN BY:	DM	DATE:	MARCH 2016		
CHECKED BY:		SCALE:	NOTED		

3/8/2016
K:\2015\154022 - BAINBRIDGE IS CITY DOCK IMPROVEMENTS\90% SUBMITTAL\154022.01-C11.DWG

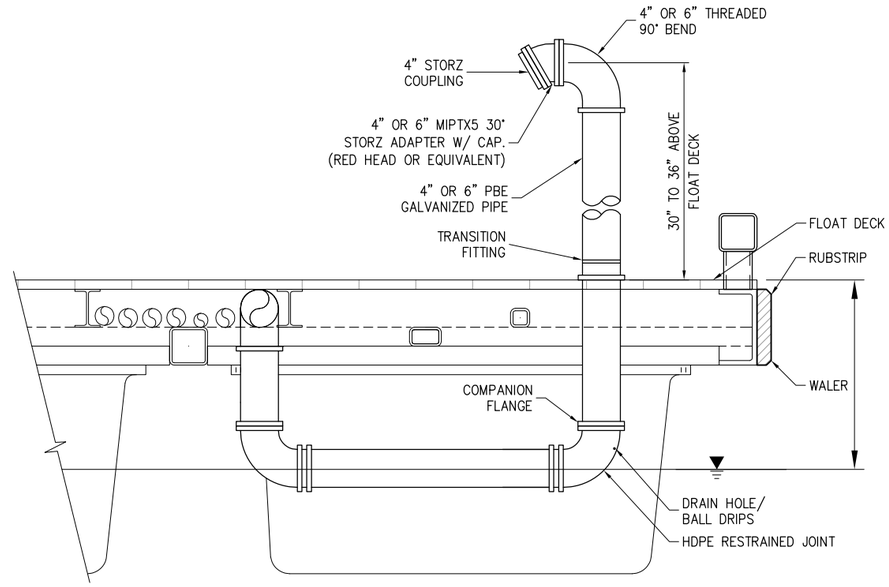

STANDPIPE

0 4" 8" 16" 2 FT.

FIRE DEPARTMENT CONNECTION (FDC) NOTES:

1. SHALL COMPLY WITH NFPA-13 STANDARD FOR PIPE SIZE AND MATERIAL.
2. ALL JOINTS SHALL BE RESTRAINED.
3. INSTALL DRAIN HOLE AND BALL DRIP TO ALLOW FOR PIPE DRAIN WHEN NOT IN USE.
4. A HYDROSTATIC PRESSURE TEST AT 225 FOR 2 HOURS AS PER NFPA STANDARDS IS REQUIRED TO BE WITNESSED BY CITY OF BAINBRIDGE FIRE MARSHALL.
5. A FINAL VELOCITY FLUSH OF PIPE AT A FLOW RATE OF 10 FEET PER SECOND. IT SHALL BE WITNESSES BY CITY OF BAINBRIDGE FIRE MARSHALL OR DESIGNER UNTIL PIPE IS CLEAR OF CONSTRUCTION DEBRIS.
6. ALL FIRE DEPARTMENT SHALL BE 30-36 INCHES ABOVE FLOAT DECK.
7. ALL FIRE DEPARTMENT CONNECTIONS SHALL HAVE "REDHEAD" OR EQUIVALENT STORZ COUPLING WITH CAP AND CHAIN. A 30° OR 45° ELBOW SHALL BE PROVIDED BETWEEN RISER PIPE AND STORZ COUPLING.
8. ALL FIRE DEPARTMENT CONNECTIONS RISERS SHALL BE PAINTED A STANDARD MEDIUM "RED" FROM FINISHED GRADE UP TO, BUT NOT INCLUDING, THE STORZ COUPLING ADAPTER.
9. ALL FIRE DEPARTMENT CONNECTIONS WILL BE ON PRIVATE PROPERTY. THE FDC'S WILL NOT BE LOCATED IN THE CITY OF BAINBRIDGE RIGHT-OF-WAY.

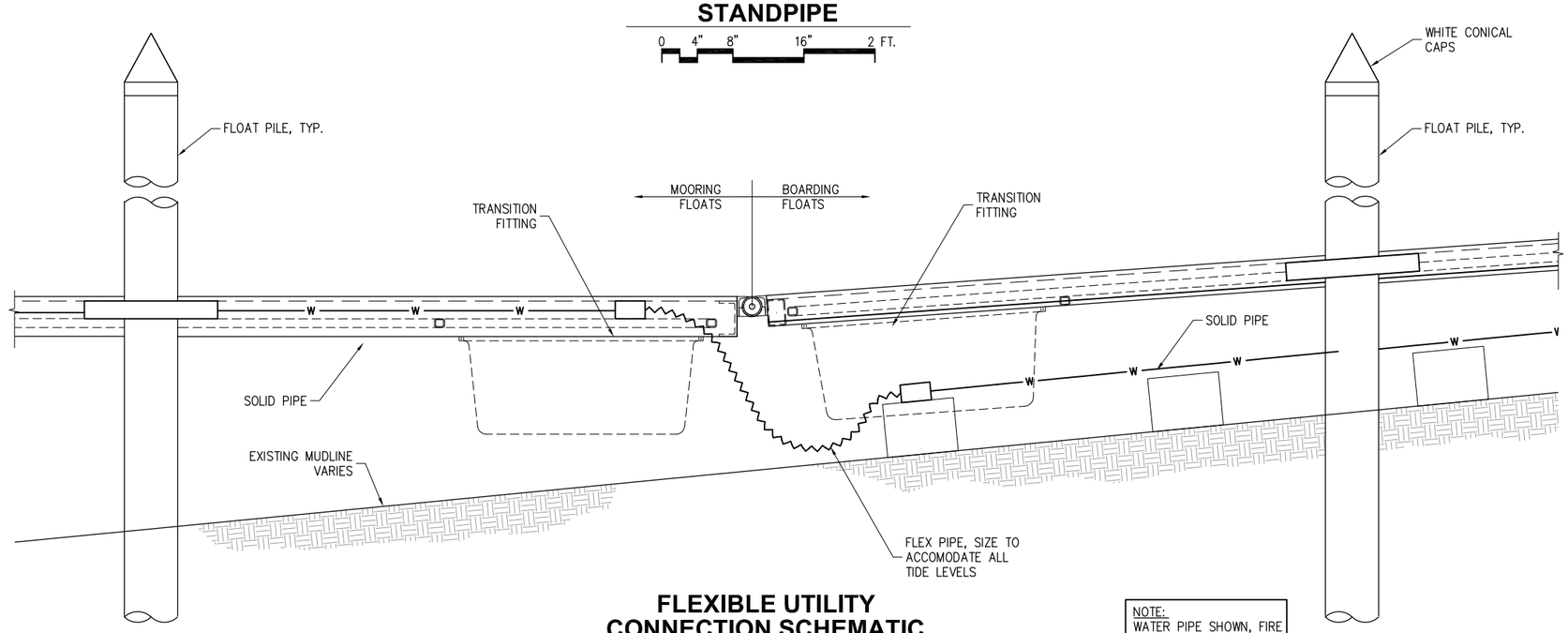

FLEXIBLE UTILITY CONNECTION SCHEMATIC

0 1 2 3 4 FT.

NOTE:
WATER PIPE SHOWN, FIRE AND SEWER SIMILAR

90% SUBMITTAL

P N D ENGINEERS, INC.
1736 Fourth Avenue S., Suite A
Seattle, Washington 98134
P: 206.624.1387
www.pndengineers.com

PND ENGINEERS, INC. IS NOT RESPONSIBLE FOR SAFETY PROGRAMS, METHODS OR PROCEDURES OF OPERATION, OR THE CONSTRUCTION OF THE DESIGN SHOWN ON THESE DRAWINGS. WHERE SPECIFICATIONS ARE GENERAL OR NOT CALLED OUT, THE SPECIFICATIONS SHALL CONFORM TO STANDARDS OF INDUSTRY. DRAWINGS ARE FOR USE ON THIS PROJECT ONLY AND ARE NOT INTENDED FOR REUSE WITHOUT WRITTEN APPROVAL FROM PND. DRAWINGS ARE ALSO NOT TO BE USED IN ANY MANNER THAT WOULD CONSTITUTE A DETRIMENT DIRECTLY OR INDIRECTLY TO PND.

REVISIONS

REV	DATE	DESCRIPTION

CITY OF BAINBRIDGE ISLAND WATERFRONT DOCK RENOVATION

TITLE: **UTILITY DETAILS**

DESIGNED BY:	NA	PROJECT NO:	154022.01	SHEET NO:	C12 OF 19
DRAWN BY:	DM	DATE:	MARCH 2016		
CHECKED BY:		SCALE:	NOTED		

3/8/2016
K:\2015\154022 - BAINBRIDGE IS CITY DOCK IMPROVEMENTS\90% SUBMITTAL\154022.01-C12.DWG

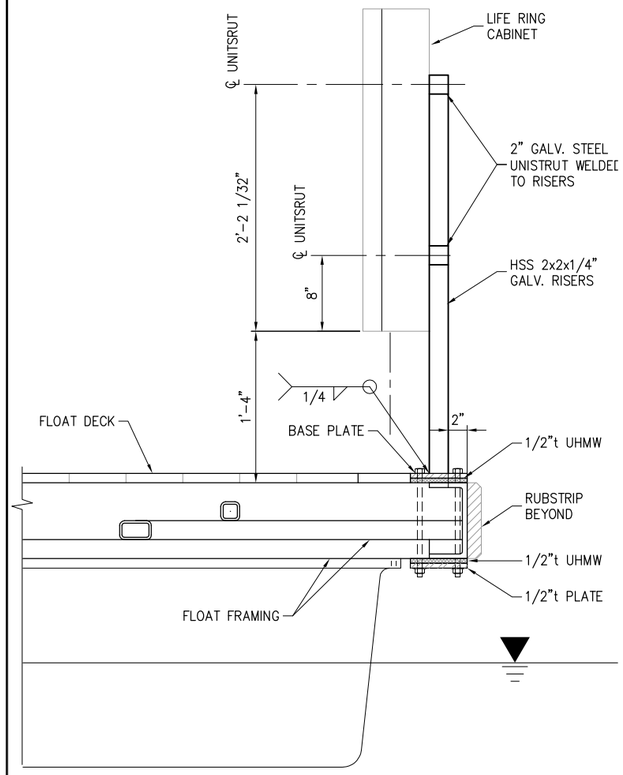

SECTION

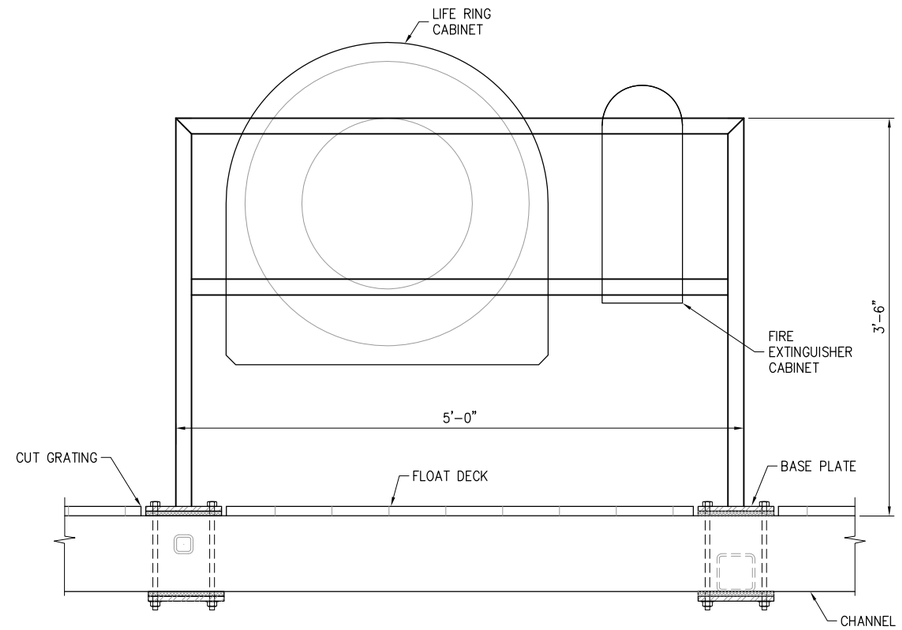

ELEVATION

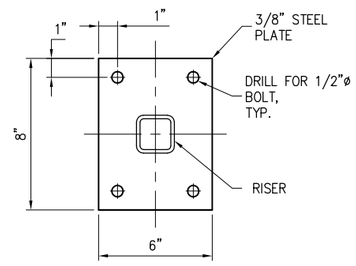

BASE PLATE

COMBINED FIRE EXTINGUISHER AND LIFE RING CABINET STAND

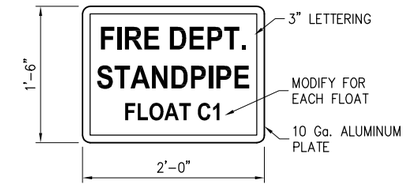

SIGNS SHALL READ:	QUANTITY
FLOAT C1	1
HEADWALK FLOAT	3

FIRE DEPARTMENT CONNECTION SIGN

(12) SIGNS TOTAL

SIGN NOTES:

1. COLOR TO BE RED LETTERING ON A WHITE BACKGROUND.
2. SUBMIT LETTERING TO ENGINEER BEFORE ORDERING.
3. PROVIDE SIGN AT EACH FIRE DEPARTMENT INLET CONNECTION.

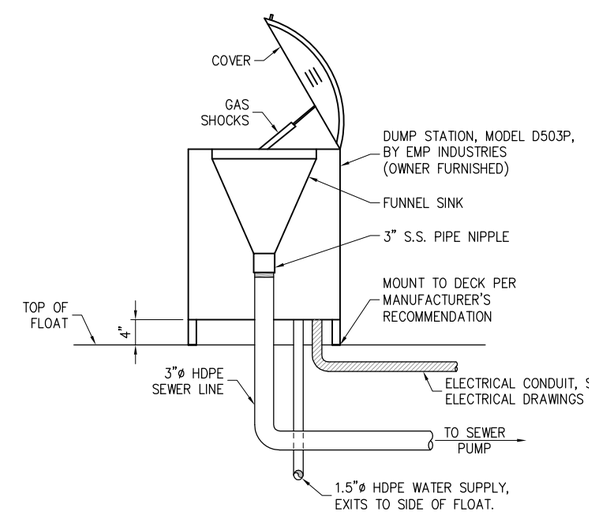

NEW DUMP STATION

NOTE: PLUMBING & ELECTRICAL INSTALLATION BY CONTRACTOR.

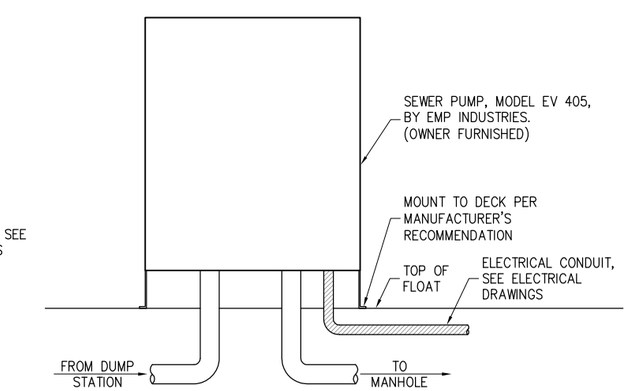

SEWER PUMP

NOTE: PLUMBING & ELECTRICAL INSTALLATION BY CONTRACTOR.

90% SUBMITTAL

P | N | D ENGINEERS, INC.
1736 Fourth Avenue S., Suite A
Seattle, Washington 98134
P: 206.624.1387
www.pndengineers.com

PND ENGINEERS, INC. IS NOT RESPONSIBLE FOR SAFETY PROGRAMS, METHODS OR PROCEDURES OF OPERATION, OR THE CONSTRUCTION OF THE DESIGN SHOWN ON THESE DRAWINGS. WHERE SPECIFICATIONS ARE GENERAL OR NOT CALLED OUT, THE SPECIFICATIONS SHALL CONFORM TO STANDARDS OF INDUSTRY. DRAWINGS ARE FOR USE ON THIS PROJECT ONLY AND ARE NOT INTENDED FOR REUSE WITHOUT WRITTEN APPROVAL FROM PND. DRAWINGS ARE ALSO NOT TO BE USED IN ANY MANNER THAT WOULD CONSTITUTE A DETRIMENT DIRECTLY OR INDIRECTLY TO PND.

REVISIONS

REV	DATE	DESCRIPTION

CITY OF BAINBRIDGE ISLAND WATERFRONT DOCK RENOVATION

TITLE: **UTILITY DETAILS**

DESIGNED BY:	NA	PROJECT NO:	154022.01	SHEET NO:	C13 OF 19
DRAWN BY:	DM	DATE:	MARCH 2016		
CHECKED BY:		SCALE:	NOTED		

3/8/2016
K:\2015\154022 - BAINBRIDGE IS CITY DOCK IMPROVEMENTS\90% SUBMITTAL\154022.01-C13.DWG

PROJECT NOTES

1. GENERAL: WORK SHALL BE DONE IN ACCORDANCE WITH NFPA 70 AS ADOPTED BY THE CITY OF BAINBRIDGE ISLAND, KITSAP COUNTY, AND THE STATE OF WASHINGTON.

2. LOCATIONS OF ELECTRICAL DEVICES, LIGHTING FIXTURES, ETC., INDICATED ON CIVIL / STRUCTURAL PLANS - INCLUDING SECTIONS, ELEVATIONS, NOTES, OR OTHER INDICATORS - TAKE PRECEDENCE OVER LOCATIONS SHOWN ON ELECTRICAL DRAWINGS.

3. REFER TO CIVIL, STRUCTURAL, MECHANICAL, LANDSCAPE, ETC., DRAWINGS FOR WORK OUTSIDE OF DIVISIONS 16 & 17. INFORMATION CONVEYED WITHIN THE ELECTRICAL DRAWINGS ILLUSTRATING OR REFERENCING WORK OF OTHER DIVISIONS IS FOR REFERENCE ONLY. SPECIFICATION BY THE APPROPRIATE DIVISIONS SHALL APPLY.

4. GENERAL NOTES ARE SHOWN ON SHEETS MOST RELEVANT TO SPECIFIC NOTE; HOWEVER, GENERAL NOTES ON EACH SHEET SHALL APPLY IN PRACTICE TO ALL ELECTRICAL DRAWINGS.

5. NOT ALL COMPONENTS OF THE ELECTRICAL SYSTEMS ARE SHOWN (FOR SIMPLICITY). PROVIDE MATERIALS AND LABOR NECESSARY FOR A COMPLETE AND OPERATIONAL SYSTEM.

6. STAINLESS STEEL HARDWARE: MATERIALS USED FOR THE MOUNTING AND SUPPORT OF BOXES CABLES, RACEWAYS, LIGHT FIXTURES, OUTLETS, AND OTHER DIVISION 16 EQUIPMENT, SHALL BE STAINLESS STEEL. THIS REQUIREMENT APPLIES TO THE AFOREMENTIONED COMPONENTS WHEN INSTALLED OUTSIDE ABOVE GRADE OR WHEN INSTALLED OVER WATER (ABUTMENT & FLOATING DOCKS).

7. ELECTRICAL DRAWINGS ARE DIAGRAMMATIC. EXACT LOCATIONS OF ELECTRICAL EQUIPMENT IS APPROXIMATE. CHANGES MADE BY THE OWNER IN LOCATING ELECTRCAL COMPONENTS OF UP TO TEN FEET HORIZONTALLY IS A PART OF THIS CONTRACT FOR FLOATS. THESE CHANGES MAY BE IMPLEMENTED, AT NO CHARGE TO THE OWNER, IF MADE PRIOR TO FINAL APPROVAL OF SHOP DRAWINGS.

8. COORDINATE LOCATIONS OF ELECTRICAL AND COMMUNICATION CHASES AND CONDUITS WITH OTHER TRADES. ADJUST LOCATIONS AS NECESSARY TO AVIOD CONFLICTS.

9. SCOPE OF WORK: THE SCOPE OF ELECTRICAL WORK FOR THIS PROJECT INCLUDES BUT IS NOT LIMITED TO THE FOLLOWING:

   A. INSTALLATION OF ELECTRICAL SERVICE EQUIPMENT, UNDERGROUND DUCTS, VAULTS, AND HANDHOLES. FEEDERS AND BRANCH CIRCUITS IN UPLANDS, FLOATS, GANGWAYS, & PIERS, FOR A COMPLETE SYSTEM.

   B. PERMITS: GIVE ALL NECESSARY NOTICES, OBTAIN ALL PERMITS AND PAY ALL GOVERNMENT TAXES, FEES AND OTHER COSTS IN CONNECTION WITH THIS WORK. OBTAIN ALL REQUIRED CERTIFICATES OF INSPECTION OF THE WORK AND DELIVER SAME TO THE ENGINEER AT THE TIME OF SUBSTANTIAL COMPLETION AND BEFORE REQUEST FOR FINAL PAYMENT.

   C. ELECTRICAL SERVICE: COORDINATE ELECTRICAL SERVICE ARRANGEMENTS WITH PUGET SOUND ENERGY. INSTALLATION SHALL BE IN COMPLIANCE WITH UTILITY COMPANY STANDARDS. FURNISH AND INSTALL COMPONENTS OF ELECTRICAL SERVICE EQUIPMENT, CONDUITS, BOXES, VAULTS, ETC., IDENTIFIED IN THE CURRENT UTILITY COMPANY STANDARDS AS OWNER PROVIDED.

   D. TEMPORARY POWER: THE SCOPE OF WORK INCLUDES PROVIDING TEMPORARY POWER DURING CONSTRUCTION. PROVIDE NECESSARY TEMPORARY POWER REQUIRED BY OTHER TRADES IN THE EXECUTION OF THIS CONTRACT. THIS INCLUDES TEMPORARY CONNECTIONS TO THE ELECTRICAL SYSTEMS. PROVIDE TEMPORARY POWER TO FACILITIES AS REQUIRED BY THE GENERAL CONTRACT AND PHASING OF WORK. COORDINATE WITH SERVING ELECTRIC UTILITY.

   E. DEMOLITION & EXISTING CONDITIONS: THIS SCOPE OF WORK INCLUDES THE DEMOLITION OF THE EXISTING ELECTRICAL SERVICE, FEEDERS, BRANCH CIRCUITS, ETC., SERVING THE EXISTING FLOATING DOCK. (RE)CONNECT EXISTING SITE LIGHTING AND KIOSK POWER TO DISTRIBUTION PANEL 'MDB'.

LUMINAIRE SCHEDULE

TYPE	SIZE / DESCRIPTION	LAMP IMFORMATION TYPE	LAMP IMFORMATION QTY.	LAMP IMFORMATION LAMP TYPE	TOTAL WATTS	MANUFACTURER	CATALOG NUMBER	VOLTS	MOUNTING	RECESS DEPTH	REMARKS
S3	LED BOLLARD (NOM. 36"H)	LED	1	LED	9	BEGA	8500 LED	120	DOCK	-	
S15	POLE MOUNTED LUMINAIRE	LED	1	LED	77	KIM LIGHTING	LIGHT: PT-BNS1-H2-E35-60L 3K-120V POLE: VERIFY	120	DOCK	-	SEE CUT SHEET E5; PROVIDE WITH 120V GFCI RECEPT. IN POLE BASE. RECEPTACLE OPPOSITE SIDE FROM LUMINAIRE.
							PROVIDE LUMINAIRE WITH FACTORY INSTALLED HUBBELL WIRELESS CONTROL MODULE (HUBBELL CATALOG NUMBER WIR-GATEWAY-CM). MOUNT GATEWAY TO THE EQUIPMENT RACK NEAR PANEL DP2. CONNECT TO 120-VOLT CIRCUIT IN PANEL RR2; PROVIDE 120-VOLT/1-POLE BREAKER. UPDATE PANEL SCHEDULE TO REFLECT CHANGE.				
S30	SOLAR POWERED NAVIGATION	-	-	-	-	HENDERSON MARINE	MODEL 701	-	DOCK		SELF CONTAINED SOLAR POWERER NAVIGATION LIGHT. PROVIDE WITH BLUE LENS.

ABBREVIATIONS

A, AMP	AMPERES	EF	EXHAUST FAN	LCP	LIGHT CONTROL PANEL	PRI	PRIMARY
AF	AMPERE (RATED) FUSES	EMT	ELECTRICAL METALLIC TUBING	MAX	MAXIMUM	PSE	PUGET POWER ENERGY
AFF	ABOVE FINISHED FLOOR	ENCL	ENCLOSURE	MCA	MINIMUM CIRCUIT AMPERES	REQD	REQUIRED
AFG	ABOVE FINISHED GRADE	EOL	END OF LINE	MFR	MANUFACTURER	RNC	RIGID NONMETALLIC CONDUIT (PVC)
AL	ALUMINUM (ALLOY)	EPA	EFFECTIVE PROJECTED AREA	MIN	MINIMUM	RS	RAPID START
ALC	AUTOMATED LIGHTING CONTROL	EWC	ELECTRIC WATER COOLER	MISC	MISCELLANEOUS	SEC	SECONDARY
AS	AMPERE (RATED) SWITCH	EWH	ELECTRIC WATER HEATER	MLO	MAIN LUGS ONLY	SPDT	SINGLE POLE DOUBLE THROW
ATS	AUTOMATIC TRANSFER SWITCH	FA	FIRE ALARM	MTD	MOUNTED	SPST	SINGLE POLE SINGLE THROW
AUTO	AUTOMATIC	FAA	FIRE ALARM ANNUNIATOR	MTR	MOTOR	SURF	SURFACE
AUX	AUXILIARY	FC	FOOT CANDLES	-N-	NEUTRAL (GROUNDED CONDUCTOR)	SWBD	SWITCHBOARD
AWG	AMERICAN WIRE GAUGE	FLA	FULL LOAD AMPERES	NC	NORMALLY CLOSED	SWGR	SWITCHGEAR
BAT	BATTERY	FLEX	FLEXIBLE	NEC	NATIONAL ELECTRICAL CODE	TB	TERMINAL BOARD
BFG	BELOW FINISHED GRADE	FU	FUSE	-NEG	NEGATIVE	TDC	TIME DELAY CLOSING
C	CONDUIT (CIRCULAR RACEWAY)	GEN	GENERATOR	NEMA	NATIONAL ELECTRICAL MANUFACTURE'S ASSOC.	TDO	TIME DELAY OPENING
CAB	CABINET	GFI	GROUND FAULT CIRCUIT INTERRUPTER	NL	NIGHT LIGHT (UNSWITCHED)	TEL	TELEPHONE
CB	CIRCUIT BREAKER	GND	GROUND	NO	NORMALLY OPEN	TYP	TYPICAL
CFM	CUBIC FEET PER MINUTE	GRC	GALVANIZED RIGID STEEL CONDUIT	NTS	NOT TO SCALE	UL	UNDERWRITERS LAB
CKT	CIRCUIT	GRD	IN-GROUND	OC	ON CENTER	UON	UNLESS OTHERWISE NOTED
CLG	CEILING	HP	HORSEPOWER	OD	OUTSIDE DIAMETER	UPS	UNINTERRUPTIBLE POWER SUPPLY
CO	CONDUIT ONLY	HZ	HERTZ (CYCLES PER SECOND)	OFCI	OWNER FURNISHED CONTRACTOR INSTALLED	V	VOLTS
CT	CURRENT TRANSFORMER	IES	ILLUMINATING ENGINEERING SOCIETY	OFOI	OWNER FURNISHED, OWNER INSTALLED	VA	VOLT-AMPERES
CU	COPPER	ID	INSIDE DIAMETER	OS	OCCUPANCY SENSOR	VFD	VARIABLE FREQUENCY DRIVE
DC	DIRECT CURRENT	IG	ISOLATED GROUND	P	POLE	W	WATT
DISC	DISCONNECT	IN	INCANDESCENT	PB	PUSH-BUTTON	W/	WITH
DIA	DIAMETER	IMC	INTERMEDIATE METAL CONDUIT	PEND	PENDANT	W/O	WITHOUT
DIV	DIVISION	K	KEY OPERATED	PH	PHASE	WP	WEATHERPROOF
DP	DISTRIBUTION PANEL	KCM	THOUSAND CIRCULAR MILS	PNL	PANEL	XFMR	TRANSFORMER
DPDT	DOUBLE POLE DOUBLE THROW	KO	KNOCK OUT	+,POS	POSITIVE	", IN	INCHES
DPST	DOUBLE POLE SINGLE THROW	KW	KILOWATTS			', FT	FEET
DWG	DRAWING	KVA	KILO VOLT-AMPERES			~	PHASE
E	EXISTING						

ELECTRICAL LEGEND

FIRE ALARM SYSTEM

SYMBOL	DESCRIPTION
FACP	FIRE ALARM CONTROL PANEL
FARA	FIRE ALARM REMOTE ANNUNCIATOR
F	FIRE ALARM SYSTEM MANUAL PULL STATION, WALL MOUNTED
F	SPEAKER - CEILING, WALL MOUNTED
F X	STROBE, WALL MOUNTED (X = CANDELA RATING)
F X	COMBINATION SPEAKER/STROBE, WALL MOUNTED (X = CANDELA RATING)
TS	SPRINKLER VALVE TAMPER SWITCH LOCATION
FS	SPRINKLER FLOW SWITCH CONNECTION
	SMOKE DETECTOR, CEILING OR PLENUM MOUNTED. PHOTOELECTRIC TYPE UON
D	SMOKE SENSOR, DUCT MOUNTED, WITH SAMPLING TUBES. PHOTOELECTRIC TYPE UON
	ELECTROMAGNETIC DOOR HOLDER, WALL MOUNTED
	FIREMAN'S PHONE JACK, WALL MOUNTED
	FIREMAN'S PHONE HAND SET, WALL MOUNTED
FSD	FIRE ALARM CONNECTION TO COMBINATION FIRE/SMOKE DAMPER
	FLAME DETECTOR (FLICKER DETECTOR)
	LIGHT (LIGHT, SIGNAL LIGHT, INDICATOR LAMP, STROBE)
	HEAT DETECTOR, CEILING MOUNTED. RATE OF RISE AND FIXED TEMPERATURE TYPE, OUN
F	HEAT DETECTOR - FIXED TEMP. ONLY
R	HEAT DETECTOR - RATE OF RISE ONLY
PIV	POST INDICATOR VALVE (PIV) CONNECTION

LIGHTING

SYMBOL	DESCRIPTION
	FLUORESCENT RECESSED LUMINAIRE (REFER TO LUMINAIRE SCHEDULE FOR TYPE)
	FLUORESCENT SURFACE-MOUNTED LUMINAIRE (REFER TO LUMINAIRE SCHEDULE)
	SHADING OF ANY LUMINAIRE INDICATES CONNECTION TO EMERGENCY CIRCUIT.
	HID FIXTURE
	LIGHTED BOLLARD OR DOWNLIGHT (INTERIOR SPACES)
	FLOOR OR GRADE MOUNTED FIXTURE
	WALL WASH - SURFACE, RECESSED CEILING MOUNT
	TRACK LIGHTING WITH HEADS AS INDICATED.
	FLUORESCENT STRIPLIGHT - POWER FEED SECTION, FEED THOUGH SECTION, LENGTH AS SHOWN.
	FLUORESCENT WALL BRACKET - RESTROOM
	STEP LIGHT FIXTURE
	ADA APPROVED WALL SCONCE
	ILLUMINATED EXIT SIGN, SHADED QUADRANT INDICATES FACES, ARROW AS SHOWN
	POLE MOUNTED LUMINAIRE
	"FOOT" INDICATES WALL MOUNTED LUMINAIRE
XXX	FIXTURE TYPE IDENTIFICATION DESIGNATION
	BATTERY POWER EMERGENCY UNIT EQUIPMENT (SEE SCHEDULE FOR QUANTITY OF HEADS) - WALL, CEILING MOUNTED.
	REMOTE HEAD
	OPTICAL SENSOR AND REFLECTOR

POWER DEVICES

SYMBOL	DESCRIPTION
C	SIMPLEX RECEPTACLE - WALL, CEILING, FLOOR
C	DUPLEX RECEPTACLE - WALL, CEILING, FLOOR
TC	DOUBLE DUPLEX RECEPTACLE - WALL, CLG, FLOOR
+44	DUPLEX RECEPTACLE AT SPECIAL HEIGHT
+44	DOUBLE DUPLEX RECEPTACLE AT SPECIAL HEIGHT
	DUPLEX RECEPTACLE - WALL - DEDICATED
	DUPLEX RECEPTACLE - WALL - HALF SWITCHED
	DUPLEX RECEPTACLE - WALL - ABOVE COUNTER/ BACKSPLASH. SEE ARCHITECTURAL DRAWINGS.
GFI	DUPLEX RECEPTACLE - WALL - WITH INTEGRAL GROUND FAULT CIRCUIT INTERRUPTER
WP	DUPLEX RECEPTACLE W/ WEATHERPROOF COVER
C	SPECIAL PURPOSE RECEPTACLE- WALL , CEILING NEMA CONFIGURATION AS NOTED
	ELECTRICAL EQUIPMENT CONNECTION. PROVIDE #10 AWG NEUTRALS. USE LIQUID-TIGHT FLEX.
	FLUSH FLOOR BOX DEVICE - DEVICE TYPES PER SYMBOLS SHOWN.
	PEDESTAL FLOOR DEVICE - DEVICE TYPES PER SYMBOLS SHOWN.
J	TWO-PIECE SURFACE METAL RACEWAY WITH RECEPTACLE AS NOTED, LENGTH AS INDICATED ON THE DRAWINGS AND WITH ALL FITTINGS AS REQUIRED
J	TELE/POWER POLE, POWER POLE
	COURTEST PHONE WITH ENCLOSURE
J	TWO-PIECE SURFACE METAL RACEWAY WITH RECEPTACLE AT 6" O.C. (LENGTH AS INDICATED).
X YZ/YZ X	POWER PEDESTAL X = 30 = 30A,120V OUTLET X = 50 = 50A, 120/240V OUTLET X = 200GFCI = 20A, 120V DUPLEX GFCI PROTECTED OUTLET Y = DOCK OR ROW ID # Z = SLIP NUMBER/STALL(S) - (1)POWER HEAD EA NOTE: "X" DESIGNATES OUTLET PER SLIP. MULTIPLE REFERENCES (30/50) INDICATES MULTIPLE OUTLETS PER SLIP.

WIRING

SYMBOL	DESCRIPTION
	CONDUIT CONCEALED IN CEILING OR WALL. LINE WEIGHT TOP TO BOTTOM = NEW, EXISTING TO REMAIN.
	CONDUIT CONCEALED IN OR BELOW CONCRETE UNDER GRADE. UNDER PIER, IN CEILING SPACE OF FLOOR BELOW. LINE WEIGHT TOP TO BOTTOM= NEW, EXISTING TO REMAIN.
	CONDUIT EXPOSED. LINE WEIGHT TOP TO BOTTOM= NEW, EXISTING TO REMAIN.
	EXISTING CONDUIT & WIRING TO BE REMOVED
—C—	COMMUNICATION CONDUIT / CABLE
—MV—	MEDIUM VOLTAGE CONDUIT
—LV—	LOW VOLTAGE CONDUCTORS
—G—	GROUNDING GRID OR CONDUCTORS
—TV—	CABLE TV WIRE / CONDUIT
—O/H—	AERIAL CONDUCTOR(S)/OVERHEAD LINE
	STROKES INDICATE QUANTITY OF #12 AWG. CONDUCTORS, UON. NOTE: NOT ALL WIRING IS SHOWN ON DRAWING. CONTRACTOR SHALL SCHEDULE OR STANDARD WIRING PRACTICES FOR BRANCH CIRCUITS.
	GROUND
	HOT
	GROUND, ISOLATED
	NEUTRAL
	HOME RUN TO INDICATED DESTINATION, 3/4"C. MIN. UON
	CONDUIT RUN TURNED UP THROUGH FLOOR OR CEILING. CORE AS REQUIRED.
	CONDUIT STUBBED OUT AT LOCATION SHOWN. PROVIDED INSULATED BUSHING & PULLROPE.
	TELEPHONE/DATA SLEEVE THROUGH WALL, ABOVE CEILING. EXTEND TO ACCESSIBLE LOCATION BOTH SIDES. TERMINATE WITH BUSHINGS. (1) 1 1/4" CO UON. COORDINATE LOCATIONS WITH CABLE INSTALLER(S) PRIOR TO ROUGH-IN.
	CABLE TRAY
J C J	JUNCTION BOXES WALL, CEILING AND FLUSH FLOOR MOUNTED. 4" SQ. BOX. UON.
PB	PULL BOX, MIN. SIZE PER NEC., UON.
	FLEXIBLE CONDUIT CONNECTION
	GROUND ROD CONNECTION
	GROUND ROD CONNECTION WITH TEST WELL BOX
	LIGHTNING SYSTEM AIR TERMINAL
	UNDERGROUND PULLBOX/VAULT (P=POWER T=TEL/COM U=UTILITY)
	UNDERGROUND PULLBOX/VAULT (PLASTIC)
	HANDHOLE

DIAGRAMS

SYMBOL	DESCRIPTION
HAND OFF AUTO	HAND/OFF/AUTO SWITCH
	SWITCH
	OVERLOADS
	NORMALLY CLOSED CONTACTOR OR RELAY CONTACTS
	NORMALLY OPEN CONTACTOR OR RELAY CONTACTS
	BUS DUCT
	BUS BAR
	BATTERY (GENERAL)
	CONNECTOR, FEMALE AND MALE RESPECTIVELY
C	CONTACTOR COIL
R	RELAY COIL
TVSS	TRANSIENT VOLTAGE SURGE SUPPRESSER
	CURRENT TRANSFORMER
	POTENTIAL TRANSFORMER
	NORMALLY OPEN PUSH BUTTON
	NORMALLY CLOSED PUSH BUTTON
PF	METER: POWER FACTOR
kW	METER: KILOWATT HOUR
kW kWh	METER: COMBINATION KILOWATT HOUR/KVAR METER
M	UTILITY CO. APPROVED SOCKET WITH METER INSTALLED
	DELTA CONNECTION
	GROUND WYE CONNECTOR
	CONNECTION TO GROUND
XXX/Y	CIRCUIT BREAKER XXX = AMPACITY Y = POLES
	FUSED SWITCH, WITH FUSE AND SWITCH AMPERE RATING
	CIRCUIT BREAKER, MEDIUM VOLTAGE, DRAWOUT
	DRAWOUT CIRCUIT BREAKER
GF	GROUND FAULT TRIP UNIT
K	KEY INTERLOCK
	CAPACITOR, POWER FACTOR CORRECTION, SIZE IN KVAR
M G	MOTOR - GENERATOR
	SOLENOID

SIGNAL DEVICES

SYMBOL	DESCRIPTION
	EQUIPMENT TERMINAL BOARD 8' HIGH X WIDTH AS SHOWN, FIRE TREATED.
	COMBO TELEPHONE/DATA OUTLET - WALL
	TELEPHONE OUTLET - WALL
	DATA OUTLET - WALL
S S_C	SPEAKER - WALL, CEILING
	VOLUME CONTROL - WALL
	BELL
	BUZZER
	CHIME
C C_C	SYSTEM CLOCK - WALL, CEILING
TV	MASTER ANTENNA TV OUTLET
	MICROPHONE / HANDSET OUTLETS

SWITCHING CONTROLS

SYMBOL	DESCRIPTION
$	SINGLE POLE SWITCH (SUPERSCRIPT DENOTES SIMILARLY MARKED LUMINARIES CONTROLLED TOGETHER)
$2	TWO POLE SWITCH
$3	THREE WAY SWITCH
$4	FOUR WAY SWITCH
$K	KEY OPERATED SWITCH
D	DIMMER SWITCH. NUMBER INDICATES WATTAGE RATING. IF NOT SHOWN 800W MINIMUM.
$PL	SWITCH WITH PILOT (PILOT IS "ON" WHEN SWITCH IS "ON")
$PL	SWITCH WITH PILOT (PILOT IS "ON" WHEN SWITCH IS "OFF")
$T	TIMER SWITCH
$WP	WEATHERPROOF SWITCH
$M	MOTOR RATED TOGGLE W/THERMAL OVERLOAD PROTECTION
PC	PHOTOCELL
TC	TIME CLOCK
OC	WALL MOUNTED DUAL LEVEL SWITCHING OCCUPANCY SENSOR
	EMERGENCY POWER OFF, HEAVY-DUTY OIL TIGHT RED MUSHROOM HEAD PUSH-BUTTON
LCP	LIGHTING CONTROL PANEL
LC	LIGHTING CONTROL STATION

SECURITY SYSTEM

SYMBOL	DESCRIPTION
CCTV	CCTV SECURITY CAMERA
	DOOR POSITION MONITOR SWITCH
	INFRARED REQUEST TO EXIT DEVICE - WALL/CEILING MOUNTED.
M	INTERCOM STATION - WALL, DESK MOUNTED, M = MASTER STATION
	PUSH-BUTTON STATION
CR	CARD READER - WALL MOUNTED
	ELECTRIC LOCK
	ELECTRIC STRIKE
	MAGNETIC LOCK
	ELECTRIC POWER TRANSFER HINGE

DISTRIBUTION & EQUIPMENT

SYMBOL	DESCRIPTION
	BRANCH CIRCUIT PANELBOARDS, SURFACE AND RECESS MOUNTED SOLID= 120/208V HATCHED= 277/480V
T	TRANSFORMER
	SERVICE AND/OR DISTRIBUTION EQUIPMENT
	MOTOR CONNECTION. X = HORSEPOWER (WHERE SHOWN)
VFD	CONNECTION TO DIV. 15 FURNISHED VARIABLE FREQUENCY DRIVE WITH INTEGRAL DISCONNECT DIV. 16 TO INSTALL VFD EQUIPMENT
J 30A	DISCONNECT SWITCH, SIZE AS NOTED OR IF NOT SHOWN SIZE PER CONNECTED MOTOR SIZE (MECH=BY DIVISION 15, TYP).
J 30A	FUSED DISCONNECT SWITCH, SIZE AS NOTED OR IF NOT SHOWN SIZE PER CONNECTED MOTOR SIZE (MECH=BY DIVISION 15, TYP).
J 30A	DISCONNECT W/ MAGNETIC MOTOR STARTER (CONTROLLER) OR CONTACTOR. SIZE AS NOTED OR IF NOT SHOWN SIZE PER CONNECTED MOTOR SIZE. (MECH=BY DIVISION 15, TYP).
30A	MAGNETIC MOTOR STARTER (CONTROLLER) OR CONTACTOR SIZE AS NOTED OR IF NOT SHOWN SIZE PER CONNECTED MOTOR SIZE. (MECH=BY DIVISION 15, TYP).

REFERENCE SYMBOLS

SYMBOL	DESCRIPTION
X	SHEET NOTE REFERENCE (FLAG NOTES)
XXX.X	FEEDER NOMINAL AMPACITY & TYPE: SEE FEEDER SCHEDULE.
X	KITCHEN EQUIPMENT REFERENCE
X Y-Y	REFER TO DETAIL NO. ON DRAWING INDICATED NOT ALL DETAIL REFERENCES ARE SHOWN. ALL DETAILS APPLY TO ALL APPLICABLE SITUATIONS, UON.
X Y-Y	ELEVATION/PHOTO TAG: REFER TO NUMBER AND SHEET INDICATED
X Y-Y	SECTION TAG: REFER TO DETAIL NO. ON DRAWING. NOT ALL DETAIL REFERENCES ARE SHOWN. ALL DETAILS APPLY.

90% SUBMITTAL

PND ENGINEERS, INC.
1736 Fourth Avenue S., Suite A
Seattle, Washington 98134
P: 206.624.1387
www.pndengineers.com

HARBOR POWER ENGINEERS, INC.
ELECTRICAL ENGINEERING FOR COASTAL & WATERFRONT FACILITIES
PM: ED DAVID, PE TEL: 206.855.4600

PND ENGINEERS, INC. IS NOT RESPONSIBLE FOR SAFETY PROGRAMS, METHODS OR PROCEDURES OF OPERATION, OR THE CONSTRUCTION OF THE DESIGN SHOWN ON THESE DRAWINGS. WHERE SPECIFICATIONS ARE GENERAL OR NOT CALLED OUT, THE SPECIFICATIONS SHALL CONFORM TO STANDARDS OF INDUSTRY. DRAWINGS ARE FOR USE ON THIS PROJECT ONLY AND ARE NOT INTENDED FOR REUSE WITHOUT WRITTEN APPROVAL FROM PND. DRAWINGS ARE ALSO NOT TO BE USED IN ANY MANNER THAT WOULD CONSTITUTE A DETRIMENT DIRECTLY OR INDIRECTLY TO PND.

EDWARD J DAVID STATE OF WASHINGTON 37483 REGISTERED PROFESSIONAL ENGINEER

REVISIONS		
REV	DATE	DESCRIPTION

PROJECT: **CITY OF BAINBRIDGE ISLAND WATERFRONT DOCK RENOVATION**

TITLE: **ELECTRICAL SYMBOLS & ABBREVIATIONS**

DESIGNED BY: EJD	PROJECT NO: 154022.01	SHEET NO:	
DRAWN BY: KD	DATE: NOV. 2015	E1	OF 19
CHECKED BY:	SCALE: NONE		

1/27/2016
P:\PROJECTS\2015-004 BAINBRIDGE ISLAND WATERFRONT DOCK\CAD\154022.01 E-SERIES.DWG

GENERAL NOTES

1. PROVIDE POWER PEDESTALS DOUBLE LUGGED. LOOP FEED PEDESTALS USING FEEDERS SHOWN.
2. PROVIDE GFI CIRCUIT BREAKERS FOR SHORE POWER PEDESTALS AS REQUIRED IN NEC ARTICLE 555.

FLAG NOTES

1. NUMBER NOTED INSIDE BOX CORRESPONDS WITH PEDESTAL NUMBER AT SLIPS – SEE FLOAT PLANS (TYP).
2. EXTEND CIRCUIT TO TYPE S3 & S12 FIXTURES ON DOCK. REFER TO DETAILS/PLANS FOR LOCATIONS OF LIGHTS.
3. FEEDER TYPE/SIZE APPLIES TO ENTIRE LENGTH OF CIRCUIT FROM DISTRIBUTION PANEL TO THE MOST DISTANT PEDESTAL.
4. PROVIDE HUBBELL WIRELESS CONTROL GATEWAY (HUBBELL CATALOG NUMBER WIR-GATEWAY-CM). MOUNT GATEWAY INSIDE THE DISTRIBUTION PEDESTAL. CONNECT TO 120-VOLT CIRCUIT IN PANEL D; PROVIDE 120-VOLT/1-POLE BREAKER.
5. EXTEND BRANCH CIRCUIT TO POWER PEDESTAL LIGHTS ON FLOATING DOCKS.

PROJECT: Bainbridge Island Waterfront Dock — Harbor Power Engineering, Inc.

PANEL D

Floating Dock — Seattle, WA

POLE	LOAD TYPE	LOAD DESCRIPTION	LOAD kVA	C.B. AMP	C.B. POLE	A	B	C.B. AMP	C.B. POLE	LOAD kVA	LOAD DESCRIPTION	LOAD TYPE	POLE
1	L	LIGHTS	0.62	20	1	o		30	2	2.40	EAST PUMP OUT	M	2
3	L	LIGHTS	0.16	20	1		o	-	-	2.40	*	M	4
5		SPARE		20	1	o		30	2	2.40	WEST PUMP OUT	M	6
7		SPARE		20	1		o	-	-	2.40	*	M	8
9		SPARE		20	1	o		20	1	0.20	TIMECLOCK/WI SCAPE CTRL	o	10
11		SPARE		20	1		o				SPACE		12
13		SPACE				o					*		14
15		*					o				*		16
17		*				o					*		18
19		*					o				*		20
21		*				o					*		22
23		*					o				*		24

		CONN. LOAD (kVA)	DEM FACTOR *	DEMAND LOAD (kVA)
LIGHTING:	---------->	0.8	1.25	1.0
RECEPTACLE:	---------->		NEC	
MOTOR:	---------->	9.6	NEC	12.0
OTHER:	---------->	0.2	1.00	0.2
		10.6 kVA		13.2 kVA
VOLTAGE: 240/120V, 1P		44.1 A		54.9 A
MAINS: 100 A				
MIN. BUS SIZE: 100 A				
		13.2		16.5
		55.1		68.6

CONNECTED LOAD SUMMARY:

PH	KVA	A
A	5.6	23.4
B	5.0	20.7

*SEE NEC FOR APPLICABLE DEMAND FACTORS

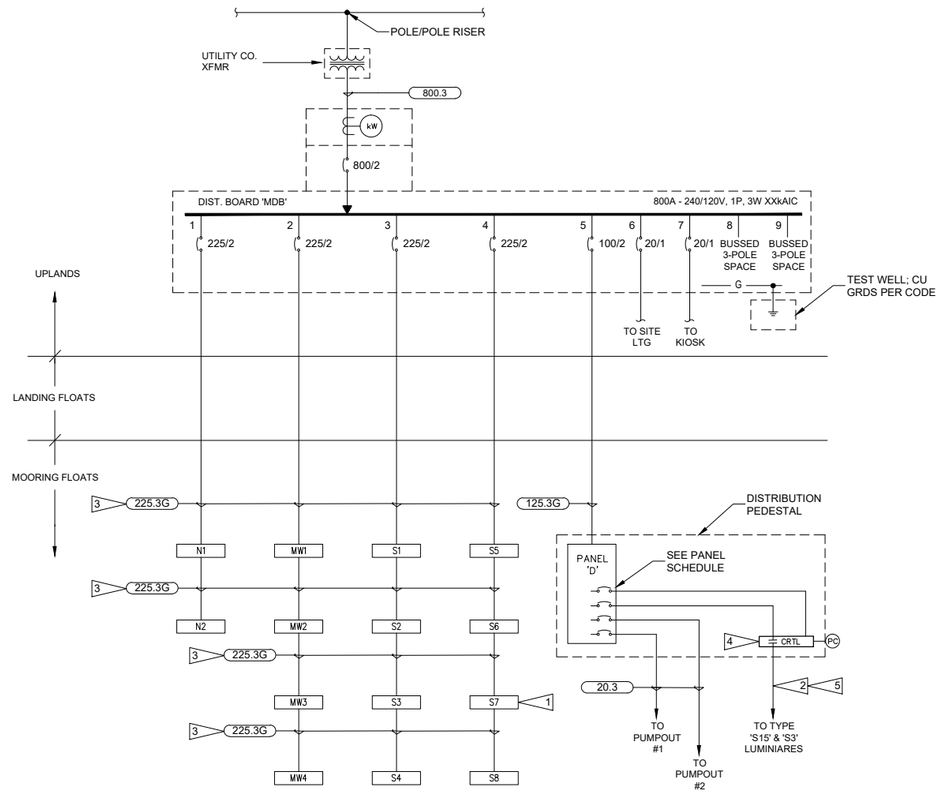

SINGLE LINE WIRING DIAGRAM

DISTRIBUTION BOARD 'MDB'

Circuit Info		Power Pedestal Outlet Information*					Power Pedestal Feeder Data					Feeder Info			Voltage Drop Calculation		
Load	Circuit	Recept 30A 120v	Recept 50A 120v	Recept 50A 120/240v	Recept 100A 120/240v	Connected Load (kVA)	f per NEC	Meter Factor 1.0 or 0.9	Demand Load (kVA)	Amps 240v single-phase	Circuit Breaker Size	Feeder Size	ohms per 1000 ft	Amps	Length to Circuit	Voltage Drop (V)	Percent Drop (%) @208V
N1 & N2	1	2	0	2	0	31.2	1	0.9	28.1	117	225	250	0.052	255	400	4.49	2.16
MW1-MW4	2	4	0	4	0	62.4	0.9	0.9	50.5	211	225	250	0.052	255	400	8.09	3.89
S1-S4	3	4	0	4	0	62.4	0.9	0.9	50.5	211	225	250	0.052	255	600	12.13	5.83
S5-S8	4	4	0	4	0	62.4	0.9	0.9	50.5	211	225	250	0.052	255	690	13.95	6.71
PANEL 'D'	5					13.2	1	1	13.2	55	100	1	0.150	130	400	6.31	3.03
Dock Summary		14	0	14	0	231.6	0.7	0.9	145.9	608							

COPPER FEEDER SCHEDULE

FEEDER TAG	CONDUITS ② MET	SETS	RNC	CONDUCTORS PER SET PHASE/NEUTRAL	GROUND ③	REMARKS ①
800.3	4.00"	2	4.00"	3 #500 KCMIL	#3/0	-
600.4	4.00"	2	4.00"	4 #350 KCM	#3/0	-
500.3		1		3 #	2 #2/0	TYPE 'G'
400.4K	2.50"	2	3.00"	5 #3/0	#2	-
400.4			4.00"	4 #500 KCMIL	#3/0	-
400.3		1	4.00"	3 #500 KCMIL	#3/0	-
350.3		1		3 #350 KCMIL	2 #1/0	TYPE 'G'
350.2		1		2 #350 KCMIL	2 #1/0	TYPE 'G'
300.4	3.00"	1	4.00"	4 #350 KCMIL	#4	-
300.3				3 #250 KCMIL	2#2	TYPE 'G'
275.4	3.00"	1	4.00"	4 #300 KCMIL	#4	-
275.3	2.50"	1	3.00"	3 #300 KCMIL	#4	-
250.4K	3.00"	1	4.00"	5 #250 KCMIL	#4	-
250.4	2.50"	1	3.00"	4 #250 KCMIL	#4	-
250.3	2.50"	1	3.00"	3 #250 KCMIL	#4	-
225.3G		1		3 #4/0	2 #3	TYPE 'G'
225.1		1		1 #3/0		TYPE 'W'
200.4	2.00"	1	2.50"	4 #3/0	#6	-
200.3G		1		3 #2/0	2 #4	TYPE 'G'
200.2		1		3 #2/0	2 #4	TYPE 'G'
180.3		1		3 #1/0		TYPE 'W'
180.2		1		2 #1/0		TYPE 'W'
180.1		1		1 #1/0		TYPE 'W'
175.3		1		3 #1/0	2 #4	TYPE 'G'
150.3		1		3 #1	2 #6	TYPE 'G'
125.4	1.50"	1	2.00"	4 #1	#6	-
125.3G		1		3 #2	2 #6	TYPE 'G'
110.4K	1.50"	1	2.00"	3 #2, 1#2/0 -N-	#6	-
110.4	1.25"	1	2.00"	4 #2	#6	-
110.3	1.25"	1	2.00"	3 #2	#6	-
100.4	1.25"	1	2.00"	4 #2	#8	-
100.3	1.25"	1	2.00"	3 #2	#8	-
90.4	1.25"	1	2.00"	4 #4	#8	-
90.3	1.00"	1	1.50"	3 #4	#8	-
80.4	1.25"	1	1.50"	4 #4	#8	-
80.3	1.00"	1	1.50"	3 #4	#8	-
70.4	1.25"	1	2.00"	4 #4	#8	-
70.3	1.00"	1	1.50"	3 #4	#8	-
60.4	1.00"	1	1.50"	4 #6	#10	-
60.3	0.75"	1	1.50"	3 #6,	#10	-
50.4K	1.00"	1	1.50"	3 #8, 1#4 -N-	#10	-
50.4	1.00"	1	1.50"	4 #8	#10	-
50.3	0.75"	1	1.50"	3 #8	#10	-
40.4	0.75"	1	1.00"	4 #8	#10	-
40.3	0.75"	1	1.00"	3 #8	#10	-
30.4	0.75"	1	1.00"	4 #10	#10	-
30.3	0.75"	1	1.00"	3 #10	#10	-
20.3		1		3 #10	#12	TYPE SOW
20.2		1		2 #10	#12	TYPE SOW
15.4	0.75"	1	1.00"	4 #12	#12	-
15.3	0.75"	1	1.00"	3 #12	#12	-

GENERAL NOTES (SCHEDULE):

A. CONDUCTORS AND CONDUITS SHOWN IN THIS SCHEDULE ARE BASED ON COPPER CONDUCTORS WITH THHN/THWN INSULATION. THIS NOTE INDICATES THAT CONDUIT (LISTED IN SCHEDULE) IS SIZED BASED ONT TYPE THHN/THWN WIRE. USE WIRE TYPES AS SPECIFIED IN SECTION 16120 OR AS NOTED ELSEWHERE IN THE CONTRACT DOCUMENTS.
B. PROVIDE NOTED SIZE GROUND CONDUCTOR IN EACH CONDUIT OF FEEDERS CONSISTING OF MULTIPLE SETS OF CONDUCTORS.
C. NOT ALL FEEDERS ARE NECESSARILY USED ON THIS PROJECT.
D. NOMINAL AMPACITIES GREATER THAN 100 AMPS ARE FOR 75°C TERMINATIONS.
E. ON FEEDERS SHOWN WITH A ".6" SUFFIX, PROVIDE SIX PHASE CONDUCTORS AND ONE GROUND WIRE IN CODE SIZED CONDUIT. INCLUDE 80% DERATING FACTOR ON PHASE CONDUCTOR SIZE.
F. CONDUIT SIZES AND QUANTITIES ON PLANS TAKE PRECEDENCE OVER THOSE SHOWN IN SCHEDULE. PROVIDE CONDUITS INDICATED IN SCHEDULE FOR FEEDERS NOT SHOWN ON PLANS.

SCHEDULE REMARKS:

① CABLES NOTED MAY BE USED ONLY WHEN ALLOWED BY CODE AND PROJECT SPECIFICATIONS.

② "MET"=EMT, GRC (RIGID), RAC, OR PVC COATED GRC TYPE CONDUITS. "RNC"=PVC 40, PVC 80 OR FIBGERGLASS TYPE CONDUITS ROUTED UNDERGROUND. REFER TO SIZING ON DRAWINGS IF "RNC" CONDUITS ARE ROUTED ABOVEGROUND. CONDUIT SIZES NOTED ON SINGLE-LINE DIAGRAM OR ON PLANS SUPERSEDE SIZES NOTED ABOVE IF LARGER.

③ PROVIDE GROUND WIRE NOTED ABOVE IN FEEDERS AND BRANCH CIRCUITS. GROUND WIRE REQUIREMENTS DO NOT APPLY TO CONNECTIONS TO UTILITY COMPANY TRANSFORMERS.

90% SUBMITTAL

PND ENGINEERS, INC.
1736 Fourth Avenue S., Suite A
Seattle, Washington 98134
P: 206.624.1387
www.pndengineers.com

HARBOR POWER ENGINEERS, INC.
ELECTRICAL ENGINEERING FOR COASTAL & WATERFRONT FACILITIES
PM: ED DAVID, PE TEL: 206.855.4600

PND ENGINEERS, INC. IS NOT RESPONSIBLE FOR SAFETY PROGRAMS, METHODS OR PROCEDURES OF OPERATION, OR THE CONSTRUCTION OF THE DESIGN SHOWN ON THESE DRAWINGS. WHERE SPECIFICATIONS ARE GENERAL OR NOT CALLED OUT, THE SPECIFICATIONS SHALL CONFORM TO STANDARDS OF INDUSTRY. DRAWINGS ARE FOR USE ON THIS PROJECT ONLY AND ARE NOT INTENDED FOR REUSE WITHOUT WRITTEN APPROVAL FROM PND. DRAWINGS ARE ALSO NOT TO BE USED IN ANY MANNER THAT WOULD CONSTITUTE A DETRIMENT DIRECTLY OR INDIRECTLY TO PND.

EDWARD J. DAVID — STATE OF WASHINGTON — 37483 — REGISTERED PROFESSIONAL ENGINEER

REVISIONS

REV	DATE	DESCRIPTION

PROJECT: **CITY OF BAINBRIDGE ISLAND WATERFRONT DOCK RENOVATION**

TITLE: **SINGLE LINE WIRING DIAGRAM**

DESIGNED BY:	EJD	PROJECT NO:	154022.01	SHEET NO:	E2 OF 19
DRAWN BY:	KD	DATE:	NOV. 2015		
CHECKED BY:		SCALE:	NOTED		

1/27/2016
P:\PROJECTS\2015-004 BAINBRIDGE ISLAND WATERFRONT DOCK\CAD\154022.01 E-SERIES.DWG

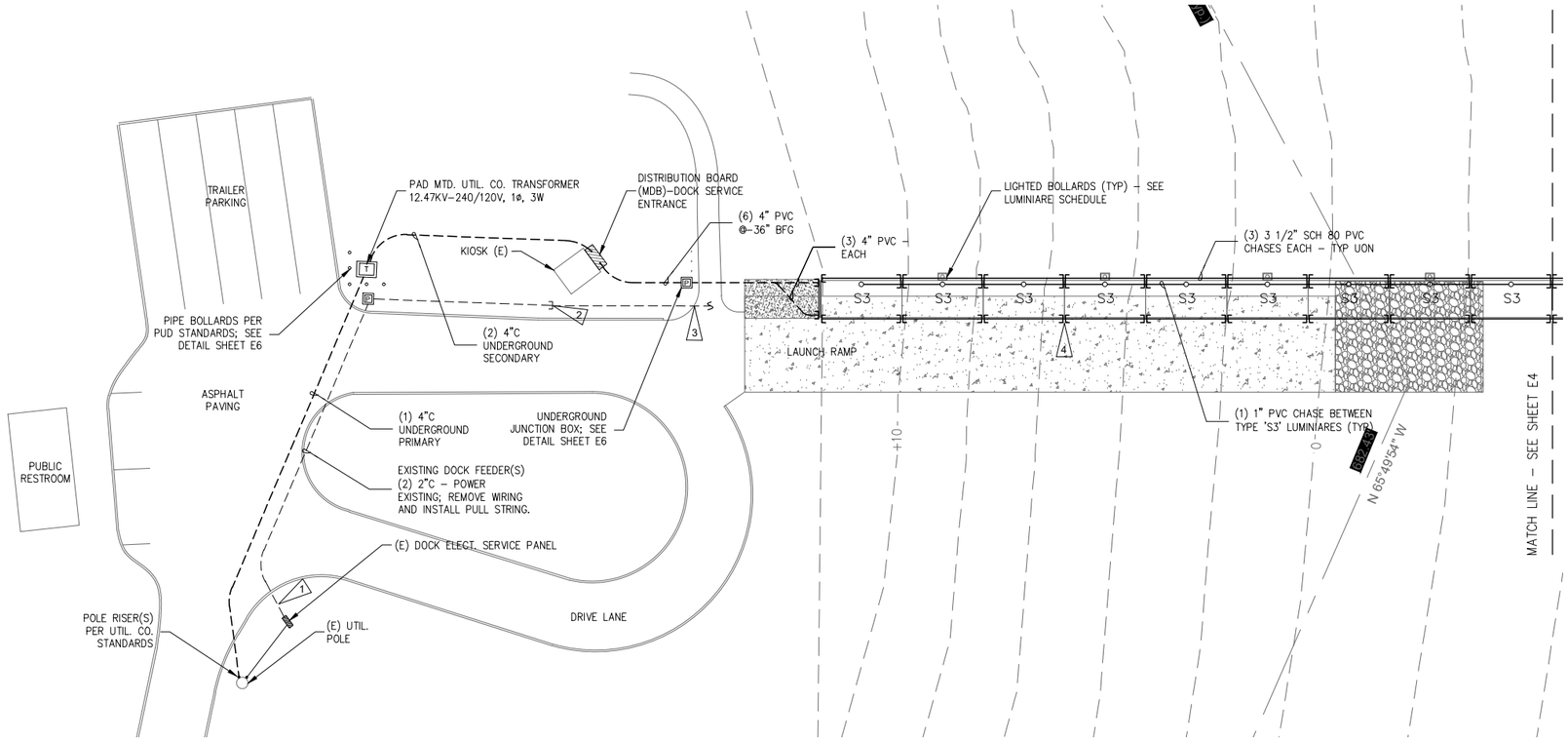

ELECTRICAL SITE PLAN - NORTH

0 5 10 20 40 60 FT

INCOMING ELECTRICAL SERVICE DIVISION OF RESPONSIBILITY					
	ELEC. CONTR.	UTILITY CO.		ELEC. CONTR.	UTILITY CO.
PRIMARY CONDUIT	☐	☒	SECONDARY CONDUIT	☒	☐
PRIMARY CONDUCTORS	☐	☒	SECONDARY CONDUCTORS	☒	☐
TRANSFORMER	☐	☒	C/T ENCLOSURE	☒	☐
TRANSFORMER PAD	☒	☐	C/T's	☐	☒
PRIMARY GROUNDING	☒	☐	METER BASE	☒	☐
BOLLARDS	☒	☐	METER	☐	☒
TRANSFORMER CONNECTIONS	☐	☒	METER GROUNDING	☒	☐

NOTES:
1. CONTACT AND COORDINATE ALL REQUIREMENTS AND RESPONSIBILITIES WITH SERVING UTILITY COMPANIES PRIOR TO SUBMITTING BID.
2. ALL SERVICE INSTALLATION WORK SHALL BE IN STRICT COMPLIANCE WITH THE REQUIREMENTS OF THE SERVING UTILITIES.

POWER UTILITY CONTACT:
.
PUGET SOUND ENERGY
DAVE MARSLAND
.
PHONE: (360) 340-0793
FAX: ( )

HARBOR POWER ENG., INC. HAS CONTACTED THE UTILITIES BUT HAS NOT RECEIVED IN WRITING THE FINAL REQUIREMENTS FROM THE POWER UTILITY. THESE DRAWINGS INDICATE OUR BEST ESTIMATION OF THEIR REQUIREMENTS. PRIOR TO BID OR ANY CONSTRUCTION CONTACT THE UTILITY COMPANY AND OBTAIN IN WRITING THEIR REQUIREMENTS.

GENERAL NOTES

1. SITE WORK FOR THIS PROJECT INCLUDES BUT IS NOT LIMITED TO THE FOLLOWING WORK:

A. DEMOLITION

1.1. REMOVE AND DISPOSE OF EXISTING ELECTRICAL UTILITIES ON (E) FLOATING DOCK AND, AS NOTED, IN UPLAND AREAS. COORDINATE WITH SERVING ELECTRICAL UTILITY AND GENERAL CONTRACTOR FOR PHASING OF DEMOLITION. REFER TO CIVIL/STRUCTURAL DRAWINGS FOR EXTENT OF SITE DEMOLITION.

1.2. PRIOR TO BID, CONTRACTOR SHALL STUDY THE EXISTING SURVEY INFORMATION, PROPERTY BOUNDARIES, AND EXTENT OF DEMOLITION. PLAN WORK SEQUENCE AS NECESSARY TO MINIMIZE OUTAGES.

1.3. ELECTRICAL CONTRACTOR SHALL ENSURE THAT SERVICE TO ADJACENT STRUCTURES, FACILITIES, ETC. NOT ASSOCIATED WITH THIS PROJECT WILL REMAIN OPERATIONAL TO THE GREATEST EXTENT POSSIBLE. SCHEDULE ALL UTILITY DOWNTIME SUCH THAT POWER OUTAGES TO RESIDENCES, FACILITIES, ETC. IS MINIMIZED. PROVIDE NOTIFICATION TO ALL AFFECTED PARTIES OF ANY IMMINENT POWER OUTAGES A MINIMUM OF 48 HOURS PRIOR TO OUTAGE.

B. TEMPORARY POWER

1.1. CONTRACTOR SHALL PROVIDE TEMPORARY POWER DURING CONSTRUCTION. COORDINATE WITH THE LOCAL ELECTRICAL UTILITY. PROVIDE TEMPORARY POWER AS REQUIRED BY OTHER TRADES IN THE EXECUTION OF BOTH DEMOLITION AND SUBSEQUENT SITE WORK INCLUDED IN THIS PROJECT. PROVIDE POWER & LIGHTING TO OWNER TEMPORARY FACILITIES AS REQUIRED BY THE CONTRACT.

C. ELECTRICAL SERVICE

1.1. THE SCOPE OF WORK FOR THE INSTALLATION OF THE ELECTRICAL SERVICE INCLUDES, BUT IS NOT LIMITED TO, COORDINATION WITH THE SERVING ELECTRICAL UTILITY, THE INSTALLATION OF THE ELECTRICAL JUNCTION BOXES, UNDERGROUND RACEWAYS, METER BASES, CT ENCLOSURES, ETC., AS REQUIRED AND FOR USE BY THE LOCAL ELECTRICAL UTILITY. THE CONTRACTOR IS RESPONSIBLE FOR COMPONENTS IDENTIFIED IN THE SERVING UTILITY COMPANY'S HANDBOOK, STANDARDS, OR POLICIES, AS OWNER PROVIDED.

1.2. THE CONTRACTOR SHALL INCLUDE UTILITY COMPANY CONNECTION CHARGES IN THE BASE BID.

1.3. LOCATION OF EXISTING SITE CONDITIONS (PULLBOXES, CONDUIT QUANTITIES AND SIZES, ROUTING, ETC.) IS BASED ON AVAILABLE DOCUMENTS. PRIOR TO SITE WORK, VERIFY EXACT LOCATION OF EXISTING SYSTEMS PRIOR TO BID.

3. ALL SITE LIGHTING CONDUCTORS (UNGROUNDED, NEUTRAL, AND GROUND) SHALL BE #10 AWG MINIMUM UON.

4. VERIFY LOCATIONS OF OTHER UTILITIES PRIOR TO COMMENCING WORK. PROVIDE REQUIRED CLEARANCES FROM OTHER UTILITIES DURING INSTALLATION OF CONDUITS, DUCT BANKS, ETC.

FLAG NOTES

1. DISCONNECT (E) DOCK FEEDER FROM SERVICE PANEL. REMOVE WIRING FROM UNDERGROUND CONDUIT & INSTALL PULL CORD.
2. CUT & CAP (E) UNDERGROUND CONDUIT SERVING DOCK. INSTALL FLUSH MONUMENT OVER CONDUIT ENDS.
3. REMOVE (E) UNDERGROUND CONDUIT TO LIMITS OF EXCAVATION AREA (FOR DOCK ABUTMENT).
4. CHASES SHALL NOT SPAN LANDING FLOAT MODULES. ALIGN CHASE ENDS ON ADJACENT LANDING FLOAT MODULES. SECURE CHASE TO MODULE WITHIN 12" OF THE END OF THE CHASE.

90% SUBMITTAL

PND ENGINEERS, INC.
1736 Fourth Avenue S., Suite A
Seattle, Washington 98134
P: 206.624.1387
www.pndengineers.com

HARBOR POWER ENGINEERS, INC.
ELECTRICAL ENGINEERING FOR COASTAL & WATERFRONT FACILITIES
PM: ED DAVID, PE TEL: 206.855.4600

PND ENGINEERS, INC. IS NOT RESPONSIBLE FOR SAFETY PROGRAMS, METHODS OR PROCEDURES OF OPERATION, OR THE CONSTRUCTION OF THE DESIGN SHOWN ON THESE DRAWINGS. WHERE SPECIFICATIONS ARE GENERAL OR NOT CALLED OUT, THE SPECIFICATIONS SHALL CONFORM TO STANDARDS OF INDUSTRY. DRAWINGS ARE FOR USE ON THIS PROJECT ONLY AND ARE NOT INTENDED FOR REUSE WITHOUT WRITTEN APPROVAL FROM PND. DRAWINGS ARE ALSO NOT TO BE USED IN ANY MANNER THAT WOULD CONSTITUTE A DETRIMENT DIRECTLY OR INDIRECTLY TO PND.

EDWARD J DAVID — STATE OF WASHINGTON — 37483 — REGISTERED PROFESSIONAL ENGINEER

REVISIONS		
REV	DATE	DESCRIPTION

PROJECT: **CITY OF BAINBRIDGE ISLAND WATERFRONT DOCK RENOVATION**

TITLE: **ELECTRICAL SITE PLAN - NORTH**

DESIGNED BY:	EJD	PROJECT NO:	154022.01	SHEET NO:	
DRAWN BY:	KD	DATE:	NOV. 2015	E3	OF 19
CHECKED BY:		SCALE:	NOTED		

1/27/2016
P:\PROJECTS\2015-004 BAINBRIDGE ISLAND WATERFRONT DOCK\CAD\154022.01 E-SERIES.DWG

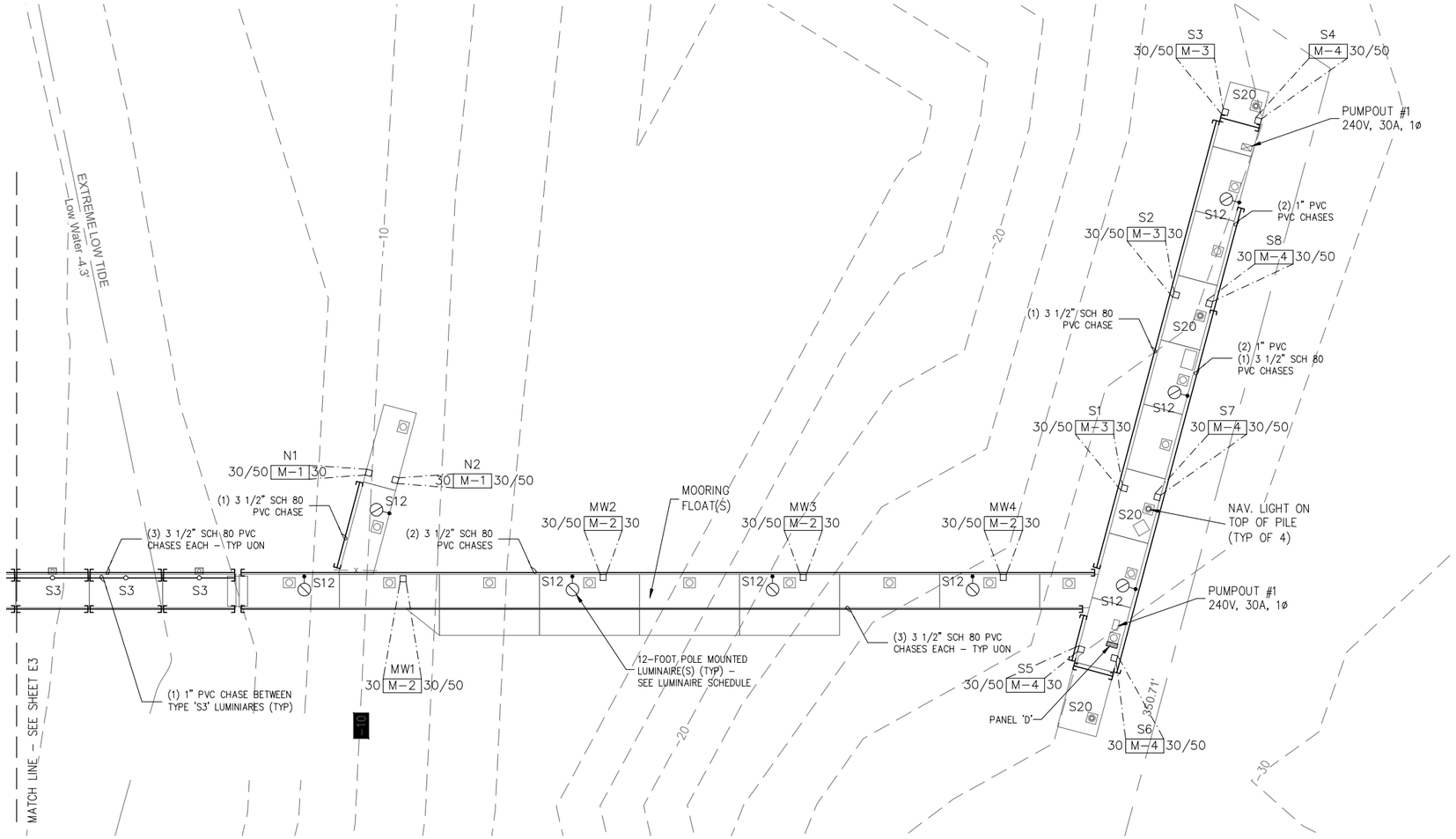

ELECTRICAL SITE PLAN - SOUTH

0 5 10 20 40 60 FT

GENERAL NOTES

1. PEDESTAL LOCATIONS SHOWN ON THE STRUCTURAL DRAWINGS TAKE PRECEDENCE OVER ELECTRICAL PLANS. ADJUST CONDUIT, CHASES, AND WIRING TO ACCOUNT FOR ANY VARIATIONS.
2. FIELD VERIFY THE EXACT LOCATION OF EXISTING ELECTRICAL EQUIPMENT AND CONDUITS.
3. PROVIDE UTILITY HANGERS FOR CHASES INSTALLED BELOW WHALERS PER FLOAT DETAILS. MAXIMUM SPACING FOR SUPPORTING ELECTRICAL CHASES SHALL BE 5-FEET ON CENTER; PROVIDE ADDITIONAL HANGERS AS REQUIRED TO SUPPLEMENT WATER LINE SUPPORTS.
4. PROVIDE EXPANSION FITTINGS IN CHASES. NO CHASE SEGMENT SHALL EXCEED 100- FEET IN LENGTH WITHOUT AN EXPANSION FITTING.

LEGEND

W
X YZ X
V

POWER PEDESTAL
V = VOLTAGE (WHEN USED)
W = SLIP NUMBER(S) SERVED
X = 30 = 30A,120V OUTLET
X = 50 = 50A,120/240V OUTLET
X = 100 = 100A,120/240V OUTLET
Y = UNIT SUBSTATION
Z = CIRCUIT NUMBER

NOTE: 'X' DESIGNATES OUTLET PER SLIP. (i.e. 30/50) INDICATES MULTIPLE OUTLETS PER SLIP. APPROXIMATE PEDESTAL PLACEMENT LOCATION

ELECTRICAL PANEL

POLE MOUNTED LUMINAIRE – SEE LUMINAIRE SCHED. SHT. E1

LIGHTED BOLLARD – SEE LUMINAIRE SCHED. SHT. E1

ELECTRICAL CHASES

90% SUBMITTAL

PND ENGINEERS, INC.
1736 Fourth Avenue S., Suite A
Seattle, Washington 98134
P: 206.624.1387
www.pndengineers.com

HARBOR POWER ENGINEERS, INC.
ELECTRICAL ENGINEERING FOR COASTAL & WATERFRONT FACILITIES
PM: ED DAVID, PE TEL: 206.855.4600

PND ENGINEERS, INC. IS NOT RESPONSIBLE FOR SAFETY PROGRAMS, METHODS OR PROCEDURES OF OPERATION, OR THE CONSTRUCTION OF THE DESIGN SHOWN ON THESE DRAWINGS. WHERE SPECIFICATIONS ARE GENERAL OR NOT CALLED OUT, THE SPECIFICATIONS SHALL CONFORM TO STANDARDS OF INDUSTRY. DRAWINGS ARE FOR USE ON THIS PROJECT ONLY AND ARE NOT INTENDED FOR REUSE WITHOUT WRITTEN APPROVAL FROM PND. DRAWINGS ARE ALSO NOT TO BE USED IN ANY MANNER THAT WOULD CONSTITUTE A DETRIMENT DIRECTLY OR INDIRECTLY TO PND.

EDWARD J DAVID
STATE OF WASHINGTON
37483
REGISTERED PROFESSIONAL ENGINEER

REVISIONS		
REV	DATE	DESCRIPTION

PROJECT: **CITY OF BAINBRIDGE ISLAND WATERFRONT DOCK RENOVATION**

TITLE: **ELECTRICAL SITE PLAN - SOUTH**

DESIGNED BY:	EJD	PROJECT NO:	154022.01	SHEET NO:	E4 OF 19
DRAWN BY:	KD	DATE:	NOV. 2015		
CHECKED BY:		SCALE:	NOTED		

1/27/2016
P:\PROJECTS\2015-004 BAINBRIDGE ISLAND WATERFRONT DOCK\CAD\154022.01 E-SERIES.DWG

KIM LIGHTING

BNS1
Bounce® PicoEmitter™ LED
revision 9/15/15 • kl_bns1eled_spec.pdf

Type:
Job:
Catalog number:

Mtg. / Fixture / Electrical Module / Finish / Options
See page 2 — See page 3 — See pages 4 - 5

Approvals:

Date:
Page: 1 of 6

Specifications

BNS1-LED
31" Diameter
60 Light Emitting Diodes
Total Max System Watts = 66W

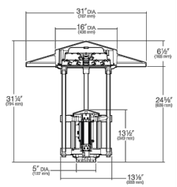

Hood and Lens Frame: Die-cast, low copper (<0.6% Cu) aluminum alloy hood and lens frame with stainless steel hinge. The hood is opened with a tool-less latch made of die-cast aluminum and stainless steel brackets. The hood is held open for relamping with a stainless steel wire self-locking stop arm. The ⅜" thick clear flat lens seals against the reflector flange by a one-piece molded silicone gasket, to produce a fully sealed optical chamber. The underside of the hood is always painted white.

Optical Module: Precision, replaceable PicoEmitters are positioned to achieve directional control toward desired task. The entire EmitterDeck® mounting assembly fastens to housing as a one-piece module.

Ballast Chamber: Die-cast, low copper (<0.6% Cu) aluminum alloy flanges compress a ribbed extruded aluminum chamber. The die-cast aluminum cover is held with two captive stainless steel screws and a retaining wire is provided to secure the cover during installation or servicing. The four heavy wall extruded support rods are mechanically fastened to the lens frame with stainless steel fasteners. The support rods are held in position through die-cast arms and mechanically fastened at the bottom with a custom aluminum bolt. The electrical wiring is channeled through a support rod with an aluminum bushing. The die-cast cover is always painted reflective white. (Optional Black Ballast Cover).

Mounted by one of the following pole attachment means:

FM - Flush Mounting by means of an expansion device activated by a single bolt within the ballast compartment. Pole must have a plain-cut top. Standard pole size is 4" O.D. (Other pole adapter sizes available; contact Kim representative).

PT - Pole Tenon mounting by means of a cast aluminum adapter containing four recessed ⅜" stainless steel allen head set screws. Pole must have a 2" pipe-size tenon (2⅜" O.D. x 4½" minimum length). Pole tenon must be field drilled at one set screw location to secure against fixture rotation.

Electronic Module: All electrical components are UL and CSA recognized, mounted on a single plate and factory prewired with quick-disconnect plugs. Module includes a driver, LiteShield® temperature control device and surge protector. Electrical module attaches to housing with key hole slots, accessible by opening the lens frame and removing optical module. Driver is rated for -40°F starting temperature and has a 0-10V dimming interface on the LiteShield device for multi-level illumination options.

Finish: Each luminaire receives a fade and abrasion resistant, electrostatically applied, thermally cured, triglycidal isocyanurate (TGIC) polyester powdercoat finish. Standard colors include (BL) Black, (DB) Dark Bronze, (WH) White, (PS) Platinum Silver, (SG) Stealth Gray, (LG) Light Gray, and (CC) Custom Color (Include RAL#).

Listed To: UL 1598 Standard for Luminaires - UL 8750 Standard for Safety for Light Emitting Diode (LED) Equipment for use in Lighting Products and CSA C22.2#250.0 Luminaires.

CAUTION: Fixtures must be grounded in accordance with national, state, and/or local codes. Failure to do so may result in serious personal injury.

HUBBELL BUILDING WIRING INC. — U.S. Patent D473,333S

KIM LIGHTING RESERVES THE RIGHT TO CHANGE SPECIFICATIONS WITHOUT NOTICE.

© 2015 KIM LIGHTING • 16555 EAST GALE AVENUE, CITY OF INDUSTRY, CA 91745-1788 • TEL: 626/968-5666 • FAX: 626/968-5716

KIM LIGHTING

BNS1
Bounce® PicoEmitter™ LED
revision 9/15/15 • kl_bns1eled_spec.pdf

Type:
Job:
Page: 2 of 6

Standard Features

Mounting

EPA:	1.2	1.2	
Cat. No:	☐ **FM** Flush Mount	☐ **PT** Pole Tenon Mount	
Pole Top Requirements:	4" O.D. Poles only	2" Pipe-size Tenon (2⅜" O.D. x 4½" min. length)	
EPA:	1.8	3.6	n/a
Cat. No:	☐ **1SA** Single Arm	☐ **2SB** Twin Mount	☐ **1W** Wall Mount
Pole Top Requirements:	Arm side-mounted to 4" or 5" O.D. poles only	Arm side-mounted to 4" or 5" O.D. poles only	n/a

Fixture
Cat. No. designates fixture and optic

BNS1 — x — E35
Housing Size: BNS1
E35 = 350mA

Distribution:
☐ H1 = Type I
☐ H2 = Type II
☐ H3 = Type III
☐ H4 = Type IV
☐ H5 = Type V
☐ HR = Type R Right
☐ HL = Type L Left

Light Distribution:
Type I, Type II, Type III, Type IV Forward Throw, Type V Square, Type R Right, Type L Left

Electrical Module

Cat. Nos. for Electrical Modules available:
60L — xK — x

Source:
60L = 60 LED's

Color Temperature:
☐ 3K = 3000K
☐ 4K = 4200K
☐ 5K = 5100K
☐ 2K = 580nm - Amber

Voltage:
☐ 120 = 120V
☐ 208 = 208V
☐ 240 = 240V
☐ 277 = 277V
☐ 347 = 347V*
☐ 480 = 480V*

*Due to current unavailability of 347V and 480V drivers, specification of these voltages may feature an integral step-down transformer.

© 2015 KIM LIGHTING • 16555 EAST GALE AVENUE, CITY OF INDUSTRY, CA 91745-1788 • TEL: 626/968-5666 • FAX: 626/968-5716

TYPE 'S15' LUMINAIRE

Bollards for light directed downwards

Post construction: One piece extruded aluminum with a one piece die-cast aluminum top housing and a base internally welded into an assembly. Die castings are marine grade, copper free (a 0.3% copper content) A360.0 aluminum alloy.

Lamp enclosure: One piece die-cast aluminum top housing removable for relamping, secured by two captive stainless steel screws threaded into stainless steel inserts. Clear tempered safety glass. Reflector made from pure anodized aluminum. Fully gasketed using a molded silicone high temperature gasket. Fully shielded to comply with LEED zones 1 and higher.

Electrical: 7.2W LED luminaire, 9.5 total system watts, -30°C start temperature. Integral 120V through 277V electronic LED driver, 0-10V dimming. LED module(s) are available from factory for easy replacement. Standard LED color temperature is 3000K with an 85 CRI. Available in 4000K (85 CRI); add suffix K4 to order.

Note: LEDs supplied with luminaire. Due to the dynamic nature of LED technology, LED luminaire data on this sheet is subject to change at the discretion of BEGA-US. For the most current technical data, please refer to www.bega-us.com.

Anchor base: Heavy cast aluminum, slotted for precise alignment. Provided with three expansion anchor bolts for installation to an existing concrete pad (KB F, supplied).

Finish: All BEGA standard finishes are polyester powder coat with minimum 3 mil thickness. Available in four standard BEGA colors: Black (BLK); White (WHT); Bronze (BRZ); Silver (SLV). To specify, add appropriate suffix to catalog number. Custom colors supplied on special order

CSA certified to U.S. and Canadian standards, suitable for wet locations. Protection class IP65

Weight: 8.2 lbs.

Type:
BEGA Product:
Project:
Voltage:
Color:
Options:
Modified:

	Lamp	A	B	Anchorage
85004 LED	7.2W LED	4⅝	19⅝	**Kit F**

BEGA-US 1000 BEGA Way, Carpinteria, CA 93013 (805) 684-0533 FAX (805) 566-9474 www.bega-us.com
©copyright BEGA-US 2014 Updated 05/14

TYPE 'S3' LUMINAIRE

GENERAL NOTES

1. IMPORTANT: PRODUCT INFORMATION (CUT SHEETS) ARE PROVIDED FOR INFORMATIONAL PURPOSES ONLY. PROVIDE PRODUCTS WITH OPTIONS AS SPECIFIED IN OTHER AREAS OF THESE CONTRACT DOCUMENTS. INFORMATION PROVIDED IN SPECIFICATIONS AND OTHER DRAWINGS TAKE PRECEDENCE OVER CUT SHEETS.

Solar-Powered Navigation Light

Optional Infrared Remote Control

SOLAR-POWERED NAVIGATION LIGHT – MODEL 701
ITEM NO. 12-XX

Typical Applications:
- 3 Nm Aids to Navigation
- Private Aids to Navigation
- Port and Marina Entrances
- Offshore Structures
- Research Buoys

Features and Benefits:
- Range of 3 nautical miles (5.4 km)
- Extremely rugged, vandal resistant and waterproof
- Provides 5 years of maintenance free operation
- Replaces traditional T155 0.25 amp navigation lights
- Autonomy: runs for 15 days without any solar charging at 12.5% duty cycle
- User selection of 194 flash patterns with IR remote control
- Adjustable light intensity and on/off light levels
- Electronics are hermetically sealed in a unitized housing
- Battery compartment can be accessed for servicing if required
- Designed for U.S. Coast Guard
- Manufactured under ISO 9001 quality controls
- Three year pro-rated warranty
- Microprocessor provides intelligent charging of battery to extend life span
- Solar panels face in all directions collecting maximum solar energy
- Conforms to USCG regulations (88.15, 22 and 24)

The Model 701 is the world's most advanced, fully integrated solar-powered LED three-nautical-mile (5.4km) navigation light. It installs in minutes, is completely self-contained and requires no maintenance or servicing for the life of its power storage pack (up to 5 years). The 701 is the smaller and lighter version of the two models available in the 700 Series; it is intended for use in regions where solar illumination is greater than 1.5 hours of winter sunlight.

Originally designed and built under contract with the U.S. Coast Guard, the 700 Series are the first lanterns using light emitting diodes (LEDs) as the light source to enter the U.S. Navigational Aid System. Solar-powered, self-contained and completely sealed, the Model 701 has been used around the world for marking navigation buoys, port and harbor entrances, breakwaters – any marine application requiring a marker light of three nautical miles of visibility.

The Technology:

Utilizing an innovative combination of solar and LED technology, the 701 charges during the day, even under cloudy conditions, and turns on automatically at night. Instead of traditional incandescent bulbs, the 701 uses an array of durable, high-intensity light emitting diodes (LEDs), which last approximately 100,000 hours. Other than replacing the 701's battery pack approximately every five years, the unit is designed to will operate flawlessly with no additional servicing or maintenance.

Due to its proprietary, unitized design, the 701 will withstand many years of harsh environmental conditions including submersion, vibration and intense sunlight.

The 701 is available in five colors that meet international chromaticity requirements for marine lighting: green, red, amber, white and blue. The unit can be ordered with any flash pattern required in the world today.

HENDERSON MARINE SUPPLY, INC.
800-523-1586 ***www.hendersonmarine.com***
Specifications subject to change without notice. Not responsible for rust.

Page 12-16
Last Updated: 3/21/2003 12:28:00 PM

TYPE 'S20' - SOLAR NAVIGATION LIGHT

Lighthouse - SS
Power Pedestal

The Lighthouse-SS offers the same standard features and options as the standard lighthouse. Like all stainless steel marina products manufactured by Eaton, the Lighthouse-SS is made of high-quality 316L stainless steel for superior corrosion-resistance.

Lighthouse - SS Power Pedestal

Lighthouse - SS Base Diagram:

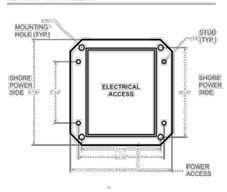

8 **EATON CORPORATION** Marina Power Equipment www.marinapower.com 1-800-723-8009

SHORE POWER PEDESTAL (TYPICAL)

Panels
Distribution Equipment

One of the many products we can offer our customers are the Cutler-Hammer PRL-3A & PRL-4 panels as stand alone units or in one of our substations. All of our busses are made of copper and are load rated, breakers are bolt-on type. Distribution panels can be 120/240V single-phase, 120/208V three-phase, 277/480V three-phase, or 220Y/127V three-phase based on your system requirements. Distribution panels can also have a main breaker or a main lug. Branch circuit breakers are provided based on customer requirements.

Standard Features
- All Internal Wiring Is Fine Stranded 1000 Volt Insulated Copper
- Copper Bus Bars
- All Exterior Hardware Is Stainless Steel
- Underwriters Laboratories Listed

Available Options
- NEMA 3R, or 4X
- Powder Coated or Stainless Steel (316L)
- Main Breaker up to 1200 Amps
- Branch Breaker 20 to 1200 Amps
- Main Lug Only

Single-Phase
- Up to 1200 Amp Main Circuit Breakers
- Up to 16 Branch Circuit Breakers

Three-Phase
- Up to 1200 Amp Main Circuit Breakers
- Up to 10 Branch Circuit Breakers

www.marinapower.com 1-800-723-8009 Marina Power Equipment **EATON CORPORATION** 27

DISTRIBUTION PEDESTAL (PANEL D)

90% SUBMITTAL

P N D ENGINEERS, INC.
1736 Fourth Avenue S., Suite A
Seattle, Washington 98134
P: 206.624.1387
www.pndengineers.com

HARBOR POWER ENGINEERS, INC.
ELECTRICAL ENGINEERING FOR COASTAL & WATERFRONT FACILITIES
PM: ED DAVID, PE TEL: 206.855.4600

PND ENGINEERS, INC. IS NOT RESPONSIBLE FOR SAFETY PROGRAMS, METHODS OR PROCEDURES OF OPERATION, OR THE CONSTRUCTION OF THE DESIGN SHOWN ON THESE DRAWINGS. WHERE SPECIFICATIONS ARE GENERAL OR NOT CALLED OUT, THE SPECIFICATIONS SHALL CONFORM TO STANDARDS OF INDUSTRY. DRAWINGS ARE FOR USE ON THIS PROJECT ONLY AND ARE NOT INTENDED FOR REUSE WITHOUT WRITTEN APPROVAL FROM PND. DRAWINGS ARE ALSO NOT TO BE USED IN ANY MANNER THAT WOULD CONSTITUTE A DETRIMENT DIRECTLY OR INDIRECTLY TO PND.

EDWARD J DAVID — STATE OF WASHINGTON — 37483 — REGISTERED PROFESSIONAL ENGINEER

REVISIONS		
REV	DATE	DESCRIPTION

PROJECT:
CITY OF BAINBRIDGE ISLAND WATERFRONT DOCK RENOVATION

TITLE:
PRODUCT INFORMATION & DETAILS

DESIGNED BY:	EJD	PROJECT NO:	154022.01	SHEET NO:	
DRAWN BY:	KD	DATE:	NOV. 2015	**E5**	OF **19**
CHECKED BY:		SCALE:	NONE		

1/27/2016
P:\PROJECTS\2015-004 BAINBRIDGE ISLAND WATERFRONT DOCK\CAD\154022.01 E-SERIES.DWG

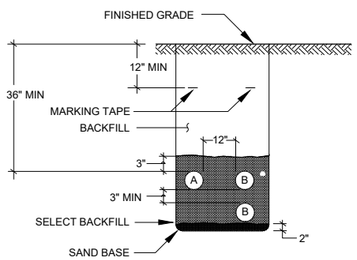

DUCT SCHEDULE		
SYM	SIZE	DESCRIPTION
A	2"	COMM (WHEN ADJACENT TO POWER)
B	VARIES	ELECTRICAL FEEDER(S)*

* PROVIDE UNDERGROUND DUCTS IN COMPLIANCE WITH STANDARDS OF INDICATED UTILITY

TYPICAL DUCT BANK DETAIL

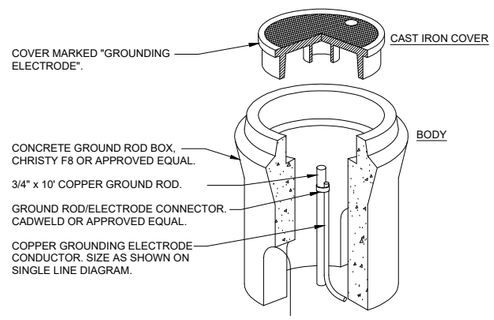

GROUND TEST WELL DETAIL

NAMEPLATE SCHEDULE		
NUMBER	TEXT SIZE	INSCRIPTION
1	1/2"	SWITCHBOARD 'MDB' (ON EXT. DOOR)
2	1/4"	MAIN DISCONNECT
3	1/4"	LIGHTING & HEATERS
4	1/4"	SPARE
5	1/4"	X
6	1/4"	X
7	1/4"	X
8	1/4"	X
9	1/4"	X

NOTES:

1. BOARD SECTIONS MAY BE REVERSED TO ACCOMMODATE INCOMING UNDERGROUND CONDUITS.
2. PROVIDE SEPARATE METER BASE ON SIDE OF CT SECTION WHEN REQUIRED BY SERVING ELECTRIC UTILITY.

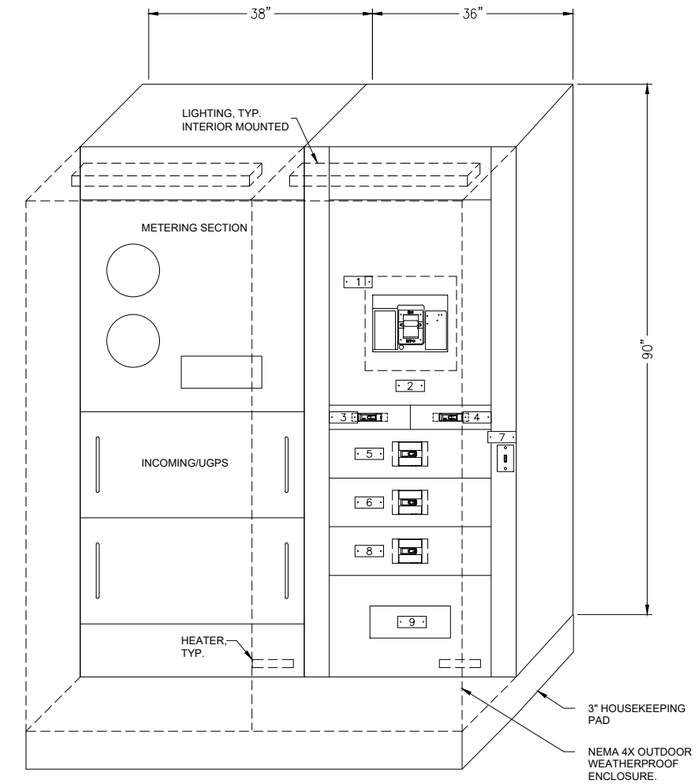

SWITCHBOARD 'MDB' ELEVATION

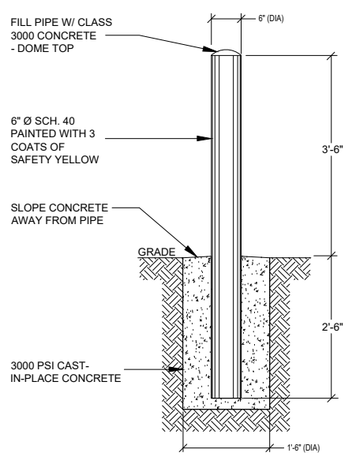

PIPE BOLLARD DETAIL

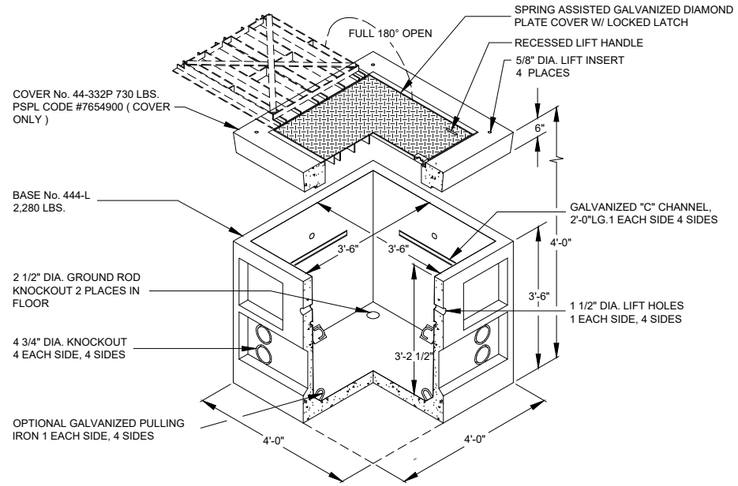

UNDERGROUND PULL BOX DETAIL

90% SUBMITTAL

P N D ENGINEERS, INC.
1736 Fourth Avenue S., Suite A
Seattle, Washington 98134
P: 206.624.1387
www.pndengineers.com

HARBOR POWER ENGINEERS, INC.
ELECTRICAL ENGINEERING FOR COASTAL & WATERFRONT FACILITIES
PM: ED DAVID, PE TEL: 206.855.4600

PND ENGINEERS, INC. IS NOT RESPONSIBLE FOR SAFETY PROGRAMS, METHODS OR PROCEDURES OF OPERATION, OR THE CONSTRUCTION OF THE DESIGN SHOWN ON THESE DRAWINGS. WHERE SPECIFICATIONS ARE GENERAL OR NOT CALLED OUT, THE SPECIFICATIONS SHALL CONFORM TO STANDARDS OF INDUSTRY. DRAWINGS ARE FOR USE ON THIS PROJECT ONLY AND ARE NOT INTENDED FOR REUSE WITHOUT WRITTEN APPROVAL FROM PND. DRAWINGS ARE ALSO NOT TO BE USED IN ANY MANNER THAT WOULD CONSTITUTE A DETRIMENT DIRECTLY OR INDIRECTLY TO PND.

EDWARD J DAVID — STATE OF WASHINGTON — 37483 — REGISTERED PROFESSIONAL ENGINEER

REVISIONS		
REV	DATE	DESCRIPTION

PROJECT: **CITY OF BAINBRIDGE ISLAND WATERFRONT DOCK RENOVATION**

TITLE: **DETAILS**

DESIGNED BY:	EJD	PROJECT NO:	154022.01	SHEET NO:	
DRAWN BY:	KD	DATE:	NOV. 2015	**E6** OF **19**	
CHECKED BY:		SCALE:	NOTED		

1/27/2016
P:\PROJECTS\2015-004 BAINBRIDGE ISLAND WATERFRONT DOCK\CAD\154022.01 E-SERIES.DWG