CITY OF BAINBRIDGE ISLAND

PUBLIC WORKS ENGINEERING DEPARTMENT

FLETCHER LANDING ROAD END IMPROVEMENTS

PROJECT NO. 00698

SHEET INDEX

GENERAL

G-001	TITLE SHEET
G-002	LEGEND AND ABBREVIATIONS

CIVIL IMPROVEMENTS

C-001	GENERAL NOTES
C-002	EXISTING CONDITIONS
C-003	DEMOLITION AND TEMPORARY EROSION & SEDIMENT CONTROL PLAN
C-004	DESIGN PLAN VIEW
C-005	GRADING PLAN
C-006	SECTION TRANSECTS A & B
C-007	SECTION TRANSECTS C & D
C-008	SECTION TRANSECTS E & F
C-009	NEW DRAINAGE DETAILS
C-010	ENROCKMENT DETAIL
C-011	SPLIT RAIL FENCE & GRAVEL PATHWAY DETAILS
C-012	RIPRAP DETAILS
L-001	PLANTING PLAN
L-002	LANDSCAPE DETAILS

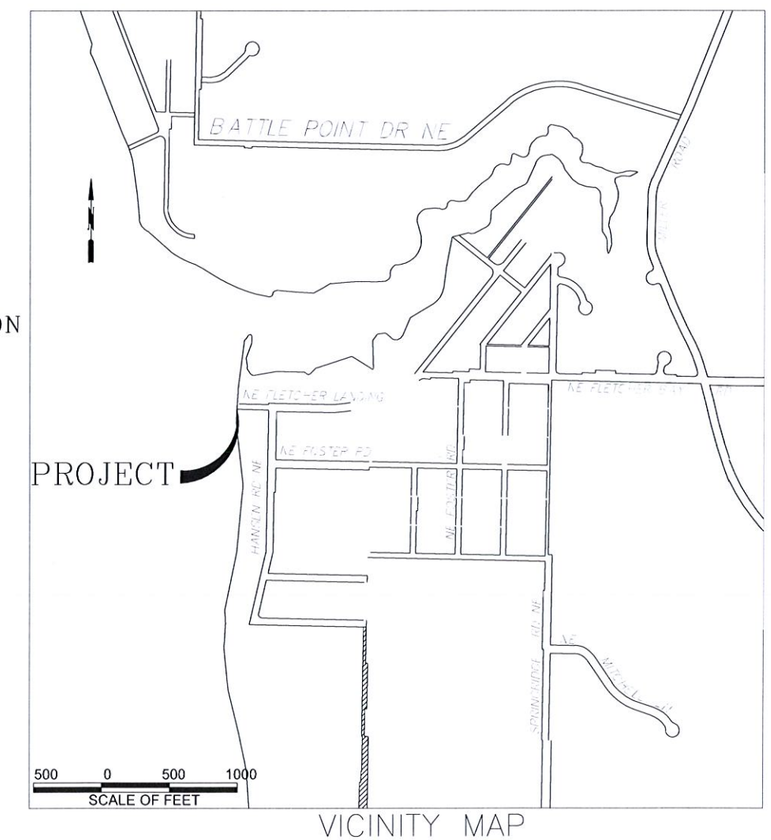

VICINITY MAP

CITY OFFICIALS:

DOUGLAS SCHULZE, CITY MANAGER

COUNCIL MEMBERS:

ANNE BLAIR
STEVE BONKOWSKI
MICHAEL SCOTT
SARAH BLOSSOM
WAYNE ROTH
VAL TOLLEFSON
ROGER TOWNSEND

RECOMMENDED FOR APPROVAL:

MARK EPSTEIN
ENGINEERING PROJECT MANAGER

STATE OF WASHINGTON REGISTERED LANDSCAPE ARCHITECT

MARK B. EPSTEIN
CERTIFICATE NO. 701

APPROVED:

KENNETH CHRISTEN HAMMER, P.E.
ENGINEERING MANAGER

DESIGN PLANS PREPARED BY:

WILLIAM J. GERKEN, P.E.
AECOM

Constructed By: CONTRACTOR
Date: DT-CONSTRUCTED
Recorded Survey: Kitsap County Auditor
AF- FILE
VOL- PAGE
Vol/Bk Page
Control Monument: POINT#
Field Bk/Pg: BOOK/PAGE
Surveyed By: SURVEYER
Date: DT-SURVEYED
Section: SEC-TWN-R
Filename: FILE-NAME
Drawn By: DRAWN-BY

PLANS LAYOUT SYMBOLS AND CALLOUTS

SYMBOL	DESCRIPTION (ABBR)
NOTE CALLOUTS	
2	POLE NOTE
5	STANDARD CONSTRUCTION NOTE ON PLAN SHEET
P4	STRIPING NOTE
4	CONDUIT NOTE
27	SIGN NOTE
P4VHM	CABLE TRACE NO.
1	CABLE TRACE NO.

SCALE

20 10 0 20 40

FEET

USGS 1982

VIEW CALLOUTS

PLAN

SCALE: 1"=?_'

PROFILE

SCALE: HORZ: 1"=?_'
VERT: 1"=?_'

DETAIL, SECTION & ELEVATION CALLOUTS

SITE SPECIFIC

DETAIL

AS SHOWN ON PLAN SHEET

1 D1 T2

SHEET WHERE SHOWN (TYP)

DESCRIPTION (TYP)

1 D3 C6 BRACKET

SCALE: N.T.S.

DETAIL NUMBER

SHEET WHERE CONSTRUCTED OR CUT (TYP)

SECTION / ELEVATION

A C5 C2 A

E D1 C3 E

C D4 C6 C

B D4 C7 B

SECTION/ELEVATION CALLOUT

A D1 C8 BRACKET

SCALE: 1"=1'

SECTION/ELEVATION LETTER

PROJECT SPECIFIC

DETAIL

AS SHOWN ON PLAN SHEET

D6 C4

PROJECT DETAIL #

4 D4 CULVERT END

SCALE: N.T.S.

SHEET WHERE SHOW (TYP)

SECTION / ELEVATION

A D2 A

E D2 C

A D2 B

A D2 E

A D2 TYP SECTION

SCALE: H 1"=__, V 1"=__

PROJECT DETAIL #

SHEET WHERE SHOW (TYP)

CITY OF BAINBRIDGE ISLAND STANDARD DETAIL

AS SHOWN ON PLAN SHEET

506A

310A TYPE A CURB RAMP

SCALE: N.T.S.

COBI STANDARD DETAIL NO.

BASE MAP SYMBOLS

SURVEY & CONTROL

MONUMENTS & POINTS

- ANGLE POINT (W/ N & E)
- BENCH MARK (W/ BN#, N, E & EL)
- REBAR/IRON PIPE (W/ N & E)
- MONUMENT IN CASE (W/ #, N, E & EL)
- MONUMENT SURFACE (W/ #, N, E & EL)
- SURVEY POINT (PK NAIL, SHINER, TACK ETC)
- SPOT ELEVATION (W/ ELEV)

SECTION DATA

- SECTION CENTER (W/ DNR#, N & E)
- SECTION CORNER (W/ DNR#, N, E, SEC#'S)
- QUARTER CORNER (W/ DNR#, N, E & SEC#'S)
- SIXTEENTH CORNER (#, N & E)
- CLOSING CORNER (W/ DNR#, N, E & SEC#'S)
- MC MEANDER CORNER (W/ DNR#, N, E & SEC#)

PLAT DATA

- A PLAT BLOCK NO (W/ #)
- TAX LOT OWNERSHIP TIE
- TAX_ID__LOT__# TAX LOT / PARCEL NUMBER (W/ #)

TOPOGRAPHIC & UTILITY

PIPING

- CAP/PLUG
- GUARD POST (BOLLARD)
- REDUCER
- THRUST BLOCK
- WATER METER
- FIRE HYDRANT
- FIRE DEP. CONNECTION
- AIR RELIEF
- BLOW-OFF
- VALVE (TYPE=G, W, PIV)
- P.R.V.
- BENDS (11-1/4°, 22-1/2°, 45°, OR 90°)
- FLANGE CONNECTION
- MECHANICAL CONNECTION
- COUPLING
- TEE
- WYE
- CROSS

TYP CALLOUTS

8"x6"TEE (FxMJ)
3" 22 1/2° BEND (ALL F)
8" GV (F)

SS AND SD

- SAN. SEWER CLEAN OUT (NORMAL & IN PAVEMENT)
- MANHOLE (TYPE 1 & 2)
- CATCHBASIN TYPE 2 (GRATE, ROUND, SOLID)
- CATCHBASIN TYP A (GRATE, SOLID)
- CATCHBASIN TYP B (GRATE, SOLID)
- STORM DRAIN INLET
- STORM DRAIN CULVERT
- CULVERT TRASH RACK OR OPEN END

VAULTS

- UG VAULTS (TYPE 444LA & 504LA)
- TY? UTILITY VAULT (TEL, TLM, SIG, WTR, GAS ETC)

ELECTRICAL

- JUNCTION BOX (TYPE 1, 2, 3 & SPECIAL)
- PAD MOUNTED TRANSFORMER
- TRANSMISSION TOWER
- UTILITY POLE
- UTILITY POLE W/RISER
- UTILITY POLE ANCHOR
- UTILITY POLE SIDEWALK ANCHOR
- STREET LIGHT ON UTILITY POLE
- STREET LIGHT ON SEPARATE POLE
- TELEPHONE RISER
- TELEPHONE RISER
- YARD LIGHT
- DECORATIVE STREET LIGHT
- ELECTRICAL SERVICE CABINET

SIGNAL

6' SQ 6' DIA

- DIPOLE DETECTOR
- DIPOLE DETECTOR (6' x VAR')
- DIPOLE DETECTOR (6' x VAR')
- QUADRUPOLE DETECTOR (6' x VAR')
- BICYCLE DET LOOPS (2' x 12')
- EVP INDICATOR LIGH
- OPTICOM SENSOR
- SONIC DETECTOR
- PEDESTRIAN SIGNAL HEAD (TYPE E, B & C)
- R/R CROSSING GATE
- CONTROLLER (TYPE 30,332,336,G,M & P)
- TELEMETRY CABINET (24"Wx46"Hx10"D)
- SERVICE CABINETS (ON FOUNDATION OR POLE)
- TRAFFIC SIGNAL POLE (TYPE 2)
- SIGNAL POLE W/LUM (TYPE 3)
- SIGNAL POLE (TYPE 1)
- SIGNAL STRAIN POLE (TYPE 4) (STL OR WOOD)
- PEDESTRIAN POLES (TYPE PPB & PS)
- VEHICLE SIGNAL HEAD
- VEHICLE SIGNAL HEAD W/ARROW INDICATOR
- 4 WAY FLASHER

GEO TECHNICAL

- B# SOIL BORING
- TP# SOIL TEST PIT
- #-- PAVEMENT CORING
- NO MONITORING WELL (TYPE, TOP, DEPTH)

LANDSCAPING

- ROCKERY
- HEDGE
- SHRUB
- BUSH
- TREE (Conifer) W/ & W/O 10'DIA DRIP LINE
- TREE (Deciduous) W/ & W/O 10'DIA DRIP LINE

MISCELLANEOUS

- BUS SHELTER BUS STOP
- MAIL BOX
- TB TELEPHONE BOOTH
- EMBANKMENT
- RIP RAP

PAVEMENT MARKINGS

- BIKE PATH
- DISABLED SYMBOL
- H.O.V. LANE SYMBOL
- ONLY LEGEND
- STOP LEGEND
- SCHOOL LEGEND
- RAILROAD CROSSING
- STRAIGHT ARROW
- LT.RT.STR.ARROW
- LEFT-STRAIGHT ARROW
- RIGHT-STRAIGHT ARROW
- LEFT-RIGHT ARROW
- 2-WAY LEFT TURN
- LEFT TURN ARROW
- RIGHT TURN ARROW

STOP LINES

- COE (2' x 10')
- DOT
- SNO CTY

RAISED PAVEMENT MARKERS: (RPM)

- LANE MARKERS TYPE I
- LANE MARKERS TYPE II

SIGNS

- ILLUMINATED MASTARM SIGN
- MASTARM ST NAME SIGN
- MASTARM MOUNTED SIGN
- SIGN W/ & W/O SINGLE POST
- SIGN W/TWO POSTS
- SIGN ON SN BRIDGE
- ST NAME INTX SIGN
- TYPE 1, 2 OR BARRICADE
- SINGLE OR DOUBLE SIDED
- TEMP W/ BASE

TEXT SYMBOLS

Ø	PHASE, DIAMETER
&	AND
'	FEET, MINUTES
"	INCHES, SECONDS
°	DEGREE

STANDARD ABBREVIATIONS

A

AB	ANCHOR BOLT
ABBRV	ABBREVIATION
ABAN	ABANDONED
ABUT	ABUTMENT
ACT	ACTUAL
ADDM	ADDENDUM, ADDITION
ADJ	ADJUST
AFF	ABOVE FINISH FLOOR
AFG	ABOVE FINISH GRADE
ALT	ALTERNATE
ALY	ALLEY
AMEND	AMENDMENT
AP	ANGLE POINT
APPROX	APPROXIMATELY
APWA	AMERICAN PUBLIC WORKS ASSOC
ARCH	ARCHITECTURE
ARV	AIR RELIEF VALVE
ASPH	ASPHALT
AUX	AUXILIARY
AVE	AVENUE
AVAR	AIR VACUUM, AIR RELEASE
AVG	AVERAGE
AWG	AMERICAN WIRE GAUGE RD

B

B	BLACK
BC	BLOCK CORNER
BITUM	BITUMINOUS
BK	BACK
BL	BASELINE, BUILDING LINE,BLUE
BLDG	BUILDING
BLVD	BOULEVARD
BLK	BLOCK
BOC	BACK OF CURB
BOW	BACK OF WALK
BOL	BOLLARD
BM	BENCH MARK
BOC	BACK OF CURB
BOL	BOLLARD
BOT	BOTTOM
BOW	BACK OF WALK
BRDG	BRIDGE
BRG	BEARING
BRK	BREAK
BTWN	BETWEEN

C

C	CONDUCTOR
CAP	CAPACITY
CB	CATCH BASIN, CABLE
CB1	CATCH BASIN TYPE 1
CB2	CATCH BASIN TYPE 2
CC	CLOSING CORNER
CCb	COAXIAL CABLE
CCd	CONTROL CONDUIT
CC	CONCRETE CURB & GUTTER
CCL	CREEK CENTER LINE
CND	CONDUIT
C&G	CURB & GUTTER
CHG	CHANGE
CHK	CHECK
CI	CAST IRON, CURB INLET
CICL	CAST IRON CONCRETE LINED
CIP	CAST IN PLACE
CIR	CIRCUIT, CIRCLE
CJ	CONSTRUCTION JOINT
CLY	CLAY
CLF	CHAIN LINK FENCE
C/L, CL	CENTERLINE
CLR	CLEARANCE, CLEAR
CLS	CLASS, CHLORINE SOLUTION
CMP	CORRUGATED METAL PIPE
CMU	CONC MASONRY UNIT
CNR	CORNER
CNTY	COUNTY
CO	CLEAN OUT
COBI	CITY OF BAINBRIDGE ISLAND
COL	COLUMN
COM	COMMON
COMM	COMMUNICATE
CONC	CONCRETE
CONN	CONNECTION
CONSTR	CONSTRUCT
CONT	CONTINUED, CONTINUOUS
COORD	COORDINATE
COP	COPPER
CNR	CORNER
CORR	CORRUGATED
CRN	CROWN OF ROAD
CS	COMBINED SS & SD SYSTEM
CT	COURT
CTR	CENTER, CONTOUR
CU	CUBIC
CULV	CULVERT
CYL	CYLINDER

D

D	DEPTH, DIPOLE
DB	DIRECT BURIAL CABLE
DBL	DOUBLE
DCL	DITCH CENTERLINE
DE	DE ENERGIZE
DEG	DEGREE
DET	DETAIL
DI	DUCTILE IRON
DIA	DIAMETER
DIAPH	DIAPHRAGM
DIR	DIRECTION
DN	DOWN
DR	DRAIN, DRIVE
D/L	DAYLIGHT
DW, D/W	DRIVEWAY
DWG	DRAWING

E

E	EAST, ELECTRICAL
EA	EACH
ECb	ELECTRICAL CABLE
ECC	ECCENTRIC
EF	EACH FACE
EL	EASEMENT LINE
ELB	ELBOW
ELJB	ELECTRICAL JB
ELEV	ELEVATION
EMH	ELECTRICAL MH
ENCL	ENCLOSE
ENG	ENGINE
ENGR	ENGINEER
EMB	EMBANKMENT
EO	EDGE OF
EOA	EDGE OF ASPHALT
EOC	EDGE OF CONCRETE
EOD	EDGE OF DIRT
EOG	EDGE OF GRAVEL
EP	EDGE OF PAVEMENT
EQ	EQUAL
EQUIP	EQUIPMENT
EV	ELECTRICAL VAULT
EVP	EMERGENCY VEH PRE-EMPTION
EW	EACH WAY
EX, EXIST	EXISTING
EXC	EXCAVATION
EXT	EXTERIOR, EXTRUDED
EXTN	EXTENSION

F

F, FLG	FLANGE
FAB	FABRICATE
FDTN	FOUNDATION
FF	FAR FACE, FIN FLOOR
FG	FINISHED GRADE
FH	FIRE HYDRANT
FIG	FIGURE
FIN	FINISH, FINISHED
FL	FOG LINE
FLD	FIELD
FLTR	FILTER
FLEX	FLEXIBLE
FM	FROM, FORCE MAIN
FNC,FN	FENCE
FOC	FACE OF CURB
FOG	FOG LINE
FOW	FACE OF WALL
FP	FULL PENETRATION, FLAG POLE
FT	FEET/FOOT
FTG	FOOTING
FWD	FORWARD
FWPS	FINISHED WATER PUMP STATION
FWY	FREEWAY

G

G	GAS LINE, GREEN
GA	GAUGE
GALV	GALVANIZED
GAR	GARAGE
GB	GREEN W/BLACK TRACER
GDWY	GRAVEL DRIVEWAY
GE	GRATE ELEVATION
GEN	GENERATOR
GI	GALV IRON
GM	GAS METER
GL	GUTTER LINE, GLASS
GLV	GLOBE VALVE
GM	GAS METER
GDR	GUARD RAIL
GRD	GROUND
GV	GAS VALVE
GVL	GRAVEL
GVT	GAS VAULT

H

H	HEIGHT
H-T	HUB & TACK
HAP	HORIZONTAL ANGLE POINT
HD	HEAD
HCP	HANDICAP SYM
HDG	HOT DIPPED GALV
HI	HEIGHT OF INSTRUMENT
HORIZ	HORIZONTAL
HPS	HIGH PRESSURE SODIUM
HSB	HIGH STRENGTH BOLT
HSE	HOUSE
HT	HEIGHT OF TARGET
HTS	HEIGHTS
HW	HOT WATER
HWY	HIGHWAY
HYDR	HYDRAULIC

I

I	IRON
ID	INSIDE DIAMETER
IDENT	IDENTIFICATION
IE	INVERT ELEV
IF	INSIDE FACE
IL	INLET
ILLUM	ILLUMINATE
IMSA	INTERNATIONAL MUNICIPAL SIGNAL ASSOC.
IN	INCH/INCHES
INCL	INCLUDE
INCR	INCREASE
IND	INDICATOR
INDUCT	INDUCTANCE
INST	INSTALL, INSTRUMENT
INSUL	INSULATION
INT	INTERSECTION, INTERNAL
INV	INVERT, INVERSE
IP	IRON PIPE
IS	ISLAND
ITE	INSTITUTE OF TRANSPORTATION ENGINEERING

J

JNX	JUNCTION
JB	JUNCTION BOX
JCT	JUNCTION
JT	JOINT

K

KG	KILOGRAM
KHZ	KILOHERTZ
KM	KILOMETER
KV	KILOVOLT
KW	KILOWATT
KWH	KILOWATT HOUR

L

L	LENGTH OF ARC, TRAFFIC DETECTION LOOP
LAB	LABORATORY
LAT	LATERAL, LATITUDE
LBS	POUNDS
LF	LINEAL FOOT/FEET
LIM	LIMIT
LK	LAKE
LLV	LONG LEG VERTICAL
LONG	LONGITUDINAL, LONGITUDE
LP	LIGHT POLE, LAMP
LT	LEFT
LUMIN	LUMINAIRE
LWR	LOWER

M

M	METER
MA	TRAFFIC DETECTION MAGNETOMETER
MACH	MACHINE
MAINT	MAINTENANCE
MATL	MATERIAL
MAX	MAXIMUM
MB	MAILBOX
MC	MEANDER CORNER
MECH	MECHANICAL
MED	MEDIUM
MER	MERIDIAN
MFR	MANUFACTURE
MH	MANHOLE
MHHW	MEAN HIGHER HIGH WATER
MHT	MEAN HIGH TIDE
MHW	MEAN HIGH WATER
MIC	MONUMENT IN CASE
MID	MIDDLE
MIL	MILITARY
MIN	MINIMUM, MINUTE
MISC	MISCELLANEOUS
MJ	MECHANICAL JOINT
MKR	MARKER
ML	MATCH LINE
MLLW	MEAN LOWER LOW WATER
MLT	MEAN LOW TIDE
MLW	MEAN LOW WATER
MOD	MODIFICATION
M/L	MONUMENT LINE
MLCSP	MORTAR LINED AND COATED STEEL PIPE
MLTCS	MORTAR LINED TAPE COATED STEEL PIPE
MLECSP	MORTAR LINED EPOXY COATED STEEL PIPE
MON	MONUMENT
MPOC	MIDPOINT ON CURVE
MSNRY	MASONRY
MT	MEAN TIDE
MUTCD	MANUAL ON UNIFORM TR CONTROL DEVICES

N

N	NORTH
NA	NOT APPLICABLE
NEG	NEGATIVE
NAUT	NAUTICAL
NEMA	NATIONAL ELECTRICAL MANUFACTURERS ASSOC
NEUT	NEUTRAL
NF	NEAR FACE
NIC	NOT IN CONTRACT
NOM	NOMINAL
NTS	NOT TO SCALE
NO	NUMBER

O

O	ORANGE
OB	ORANGE W/BLACK TRACER
O-XING	OVERHEAD CROSSING
OC	ON CENTER
OD	OUTSIDE DIAMETER
OF	OUTSIDE FACE
OH	OVERHEAD
OHP	OVERHEAD POWER
OHW	ORDINARY HIGH WATER
OL	OVERLAP PHASE
OPNG	OPENING
OPP	OPPOSITE
OPR	OPERATE
OPT	OPTIC
OT	OVERHEAD TELEPHONE
OZ	OUNCE

P

P	POLE, POWER
PAR	PARALLEL
PC	POINT OF CURVATURE
PCC	PT OF COMPOUND CURVE
PD	PERFORATED DRAIN LINE
PE	PLAIN END
PED	PEDESTRIAN
PERM	PERMANENT
PERP	PERPENDICULAR
PH	PHASE
PI	POINT OF INTERSECTION
PKWY	PARKWAY
PL	PLASTIC, PLATE, PLACE
POA	POLE ORIENTATION ANGLE
POC	POINT ON CURVE
POS	POSITIVE, POSITION
PPB	PEDESTRIAN PUSH BUTTON
PPBP	PEDESTRIAN PUSH BUTTON POST
PR	PAIR
PRC	PT OF REVERSE CURVE
PROJ	PROJECT
PROP	PROPERTY
PRV	PRES REDUCING VALVE
PSI	POUNDS PER SQ. IN.
PT	POINT OF TANGENCY, PT
PUD	PUBLIC UTILITY DISTRICT NO.1 OF SNOHOMISH CNTY
PV	POWER VAULT
PVC	POLYVINYL CHLORIDE
PVMT	PAVEMENT
PVT	POINT OF VERTICAL TANGENT
P/C	PRECAST
P/L	PROPERTY LINE
P/S	PRESTRESSED
P/T	POST-TENSIONED
PWR	POWER

Q

Q	QUADRUPOLE
QC	QUARTER CORNER
QT	QUART
QTR	QUARTER
QTY	QUANTITY
QUAD	QUADRANT, QUADRANGLE
QUAL	QUALITY

R

R	RADIUS, RED, RIVER
RA	RAISED
R-C	REBAR & CAP
RC	REINF CONC
ROCKY	ROCKERY
RCP	REINF CONC PIPE
RB	RED W/ BLACK TRACER
RD	ROAD, ROUND
RECD	RECEIVED
RECT	RECTANGLE
REF	REFERENCE
REG	REGULAR
REINF	REINFORCED
REM	REMOVE, REMOVED
REPL	REPLACE, REPLACED
REQ	REQUIRED
RET	RETAINING
RETW	RETAINING WALL
RIV	RIVER
RLD	ROLLED
RMC	RIGID METAL CD
RPT	REPORT
RR	RAILROAD
RRCS	RR CROSSING SIG
RRG	RR CROSSING GATE
RRC	RR CROSSING
RT	RIGHT
R/W	RIGHT OF WAY

S

S	SOUTH, SLOPE
SAN	SANITARY
SB	SOIL BORING, SOUTH BOUND
SC	SECTION CORNER
SCb	SHIELDED CABLE
SCC	CLOSE CORNER
SCCP	STEEL CONCRETE CYLINDER PIPE
SCEM	CENTER OF SECTION
SCHED	SCHEDULE
SD	STORM DRAIN
SDMH	STORM DRAIN MANHOLE
SE	SPOT EL/SOUTHEAST
SEC	SECOND
SECT	SECTION
SEG	SEGMENT
SEP	SEPARATE
SERV	SERVICE
SEW	SEWAGE
SHLD	SHIELDED
SHLDR	SHOULDER
SHT	SHEET
SIG	SIGNAL
SIM	SIMILAR
SL	SPAN LENGTH, SECTION LINE
S/L	SURVEY LINE
SLJB	STREET LIGHTING JB
SLP	SLOPE
SLS	STAINLESS STEEL
SLV	SLEEVE
SM	SMALL
SN	SIGN
SOV	SHUT-OFF VALVE
SP	SINGLE SHIELDED PAIR
SPA	SPACE, SPACES
SPC	SINGLE SHIELDED TWISTED PAIR CABLE
SPCb	PAIRS IN SINGLE CABLE
SPEC	SPECIFICATIONS
SR	STATE ROUTE
SQ	SQUARE
SS	SANITARY SEWER, STAINLESS STEEL
SSCO	SS CLEANOUT
SSMH	SS MANHOLE
ST	STREET
STA	STATION
STD	STANDARD
STIR	STIRRUP
STN, STL	STAINLESS STEEL
STPS	STEPS
STR	STREAM
STL	STEEL
SUB	SUBSTITUTE
SUR	SURFACE
SURV	SURVEY
SVL	SURVEY LINE
SW, S/W	SIDEWALK
SYM	SYMBOL, SYMMETRICAL
SYS	SYSTEM

T

T	TOP, TAN, TOPO
TB	THRUST BLOCK
TAN	TANGENT
T&B	TOP & BOTTOM
TBM	TEMP. BENCH MARK
TCb	BURIED TELEPHONE CABLE
TEBO	TELEPHONE BOOTH
TEL	TELEPHONE
TEMP	TEMPORARY
TESC	TEMP EROSION & SEDIMENTATION CONTROL
TJB	TELEPHONE JB
TK	THICKNESS
TMH	TELEPHONE MH
TOC	TOP OF CURB
TOE	CONCAVE SLOPE BREAK
TOP	CONVEX SLOPE BREAK
TOPO	TOPOGRAPHY
TOS	TOP OF SLAB
TOW	TOP OF WALL
TP	TWISTED PAIRS, TEST PIT
TPOL	TRAFFIC SIGNAL POLE
TRAN	TRANSITION
TR	TRAFFIC, TELEPHONE RISER
TRJB	TRAFFIC SIGNAL JB
TS	TEST STATION
TSD	TRAFFIC SN DOUBLE POST
TSS	TRAFFIC SN SINGLE POST
TUN	TUNNEL
TV	TELEVISION
TWST	TWISTED
TYP	TYPICAL

U

UDS	UTILITY DUCT SYSTEM
UNGD	UNDERGROUND
UNO	UNLESS NOTED OTHERWISE
UTIL	UTILITY
UG	UNDERGROUND
UP	UTILITY POLE
UPA	UTILITY POLE ANCHOR

V

V	VALVE
VAR	VARIES
VB	VALVE BOX, VAPOR BARRIER
VEH	VEHICLE
VERT	VERTICAL
VLT	VAULT
VP	VENT PIPE
VPC	VERTICAL CURVE PC
VPCC	VERTICAL CURVE PCC
VPI	VERTICAL CURVE PI
VPRC	VERTICAL CURVE PRC
VPT	VERTICAL CURVE PT

W

W	WEST, WATER LINE, WALK, & WHITE
W/	WITH
WB	WHITE W/BLACK TRACER
WC	WITNESS CORNER
WCR	WHEEL CHAIR RAMP
WFP	WATER FILTRATION PLANT
WGV	WATER GATE VALVE
WHSE	WAREHOUSE
WK	WALK
WM	WATER METER, WATERMAIN
W/O	WITHOUT
WO	WORK ORDER
WP	WORK POINT
WS	WATER SURFACE
WSDOT	WA DEPT OF TRANS
WT	WATTS, WEIGHT
WV	WATER VALVE
WW	WING WALL
WWM	WELDED WIRE MESH

X

X-BM	CROSS BEAM
X-RD	CROSS ROAD

Y

Y	YELLOW
YD	YARD

NO.	DATE	BY	REVISION

Scale: Horiz: 1"= NA Vert: NONE
Designed By: KJB
Inspected By: ?
W.O. No.: ?
Date: __-__-__

CITY OF BAINBRIDGE ISLAND
PUBLIC WORKS ENGINEERING DEPARTMENT

AECOM

FLETCHER LANDING ROAD END IMPROVEMENTS

STANDARD PLANS & CIVIL BASE MAP LEGENDS AND ABBREVIATIONS

Drawing No. G-002

Sheet No. 2 / 16 Of Total

Filename: COBI-Gen-Shts
XREF Filename:
Drawn By: Checked By:
Section: __-S-__-T_N-R_E
Surveyed By: Date:
Control Monument: Field Bk/Pg:
Recorded Survey Kitsap County Auditor
AF- Vol/Bk Page
Constructed By: Date:

GENERAL NOTES

DESCRIPTION OF WORK
THE WORK INCLUDES FURNISHING ALL MATERIALS, LABOR, AND EQUIPMENT AS NECESSARY TO CONSTRUCT THE ENROCKMENT, BEACH ACCESS, UPLAND IMPROVEMENTS AND OTHER PROJECT ELEMENTS TO THE LIMITS OF THE DRAWINGS. ACTIVITIES WILL INVOLVE DEMOLITION, EXCAVATION, PLACEMENT OF GEO-TEXTILE, PLACEMENT OF STONE, PLACEMENT OF ENROCKMENT, PLACEMENT OF SAND, FILLING/GRADING, STORM WATER CONVEYANCE AND FENCING. ALL CONSTRUCTION ACTIVITIES ARE TO BE LIMITED TO WITHIN THE PROJECT BOUNDARY MARKED ON C-003.

APPLICABLE CODES AND STANDARDS
ALL WORK WILL BE SUBJECT TO THE FOLLOWING STANDARDS:
1. WSDOT CONSTRUCTION STANDARDS AND SPECIFICATIONS, CURRENT EDITION.
2. CITY OF BAINBRIDGE ISLAND CODES AND STANDARDS, CURRENT EDITION.

SUBMITTALS
SUBMITTALS SHALL INCLUDE THE FOLLOWING:

1. A CONSTRUCTION WORK PLAN AND QUALITY CONTROL PLAN, INCLUDING SEQUENCE AND SCHEDULE. THE NAME AND BUSINESS ADDRESS OF THE CONTRACTOR'S INDEPENDENT LICENSED SURVEYOR SHALL BE INCLUDED. THE PROPOSED LOCATION FOR STOCKPILING AND STAGING MATERIALS SHOULD BE INCLUDED. THE PROPOSED LOCATION FOR DISPOSAL OF ANY WASTE MATERIAL SHOULD BE INCLUDED.

THE WORK AND QUALITY CONTROL PLAN SHALL BE DELIVERED TO THE ENGINEER FOR REVIEW AND APPROVAL A MINIMUM OF 2 WEEKS PRIOR TO THE BEGINNING OF CONSTRUCTION. 3 COPIES OF EACH SUBMITTAL SHOULD BE DELIVERED TO THE ENGINEER.

WORK PLAN
AT THE PRE-CONSTRUCTION MEETING, THE CONTRACTOR SHALL SUBMIT TO THE ENGINEER, FOR REVIEW AND APPROVAL BY THE CITY, A DETAILED WORK PLAN AND QUALITY CONTROL PLAN. THE PLAN SHALL INCLUDE THE FOLLOWING.
1. ORDER IN WHICH THE WORK IS TO BE PERFORMED INDICATING THE WORK SEQUENCE, EQUIPMENT TO BE USED, METHODS OF OPERATION AND THE TIME REQUIRED TO COMPLETE EACH ACTIVITY. A LIST OF KEY PERSONNEL AND SUPERVISORY CHAIN WILL BE INCLUDED.
2. PROCEDURES AND EQUIPMENT TO BE USED FOR CONSTRUCTION, INCLUDING NAME AND/OR NUMBER OF EQUIPMENT AND ITS CAPACITY, SCHEDULE, HOURS OF OPERATION, AND NAMES OF OPERATORS.
3. PROCEDURES AND EQUIPMENT FOR: COORDINATION AND PERFORMING SURVEYS AND ENVIRONMENTAL MONITORING, INCLUDING PROCEDURES FOR EMERGENCY SPILL CONTAINMENT AND REMOVAL OPERATIONS.
4. PROCEDURES AND EQUIPMENT FOR COLLECTING AND DISPOSING OF DEBRIS AS A RESULT OF CONSTRUCTION.
5. ACCESS AND RESTORATION PLAN FOR THE WORK AREA.

SUGGESTED WORK SEQUENCE
A SUGGESTED WORK SEQUENCE FOR THE PROJECT IS AS FOLLOWS THOUGH THE CONTRACTOR IS TO CREATE HIS OWN MEANS AND METHODS:
1. PLACE STRAW WATTLES, TREE PROTECTION FENCING, AND PROJECT BOUNDARY AS SPECIFIED ON C-003.
2. REMOVE AND SALVAGE FLAT STONES USED AS STAIRS AS MARKED ON C-003.
3. REMOVE EXISTING TREE AS MARKED. REMOVE PORTION OF FENCE AS MARKED. REMOVE EXISTING BOLLARDS AS MARKED.
4. EXCAVATE BEHIND EXISTING CONCRETE BULKHEAD. KEEP BULKHEAD INTACT TO THE EXTENT NECESSARY TO PROTECT/ISOLATE EXCAVATION AND CONSTRUCTION FROM EXISTING BEACH AND EROSION DUE TO ANY POTENTIAL WAVE ACTION.
5. CONSTRUCT ENROCKMENT AS CLOSE AS PRACTICABLE BEHIND EXISTING CONCRETE WALL
6. PLACE REVETMENT, COARSE SAND/GRAVEL BEACH AND UPLAND FILL.
7. REMOVE EXISTING CONCRETE BULKHEAD ONCE ALL WORK ACTIVITIES BELOW +14' MLLW ARE COMPLETED.
8. WORK IS TO BE CONDUCTED FROM BEHIND THE CONCRETE WALL. EQUIPMENT CANNOT BE OPERATED FROM EXISTING BEACH.

UTILITIES
CONTRACTOR SHALL BE RESPONSIBLE FOR PROTECTION OF ALL EXISTING UTILITIES. CONTRACTOR SHALL CONTACT LOCAL UTILITY COMPANIES AND/OR PROFESSIONAL LOCATE SERVICE FOR UTILITY LOCATIONS IN AREA(S) IMPACTED BY CONSTRUCTION.

PERMITS
CONTRACTOR SHALL COMPLY WITH THE REQUIREMENT OF ALL PERMITS. A COPY OF THE PERMITS WILL BE PROVIDED TO THE CONTRACTOR, ADDITIONAL COPIES WILL BE MADE AVAILABLE FROM THE CITY. ALL PERMITS ARE CONSIDERED PART OF THE CONTRACT DOCUMENTS. THE CONTRACTOR IS RESPONSIBLE FOR COMPLIANCE WITH THE FOLLOWING PERMITS:
1. GRADING PERMIT
2. HYDRAULIC PROJECT APPROVAL
3. CONSTRUCTION STORMWATER GENERAL PERMIT
4. SHORELINE SUBSTANTIAL DEVELOPMENT PERMIT

STAGING
LIMITED SPACE IS AVAILABLE AT THE PROJECT SITE. PROJECT STAGING AND PARKING SHALL BE COORDINATED BY THE CONTRACTOR WITH THE CITY OF BAINBRIDGE ISLAND PUBLIC WORKS ENGINEERING DEPARTMENT.

DEBRIS AND EXCESS OR UNSUITABLE MATERIAL
REMOVE ANY WOOD AND/OR OTHER DEBRIS AND STONES OVER 6" DIAMETER FROM EXCAVATION AREA(S) PRIOR TO GRADING AND PLACEMENT OF GEOTEXTILE OR ANY BACKFILL MATERIALS. ALL DEBRIS AND STONE SHALL BE REMOVED FROM THE SITE AND DISPOSED OF LEGALLY AT AN UPLAND DISPOSAL SITE. ANY FEES REQUIRED FOR DISPOSAL SHALL BE THE RESPONSIBILITY OF THE CONTRACTOR.

EXCAVATION AND GRADING
EXCAVATION AND GRADING SHALL BE DONE PER THE DESIGN DRAWINGS. CONTROL OF ALL EXCAVATION AND GRADING SHALL BE BY NEAT LINE SURVEYS. ALL SURVEYS AND PROCESSING SHALL BE PERFORMED BY AN INDEPENDENT LICENSED SURVEYOR.
FINAL GRADING SHALL BE APPROVED BY THE CITY ENGINEER.

STONE QUALITY, TESTING, AND PLACEMENT
ALL STONE USED ON THE PROJECT SHALL BE ROUGH, ANGULAR, DENSE, SOUND, AND DURABLE. STONE SHALL BE FINE GRAINED, FREE FROM FAULTS, FISSURES, SEAMS, LAMINATIONS, PLANES OF WEAKNESS, OR BANDS OF MINERALS OR DELETERIOUS MATERIALS THAT WOULD RESULT IN BREAKAGE DURING OR AFTER PLACEMENT. ROCK SHALL BE FREE OF EXPANSIVE OR OTHER MATERIALS WHICH WOULD CAUSE ACCELERATED DETERIORATION BY EXPOSURE TO PROJECT CONDITIONS. ROCK SHALL BE FREE OF ORGANIC AND SPOIL MATERIAL, AND FREE OF FINES AND SUSPENDABLE MATERIAL TO THE GREATEST EXTENT PRACTICABLE.

ALL STONE USED ON THE PROJECT SHALL CONFORM TO THE FOLLOWING QUALITY AND GRADATION REQUIREMENTS:
A. BULK SPECIFIC GRAVITY (SSD) NOT LESS THAN 2.65 (ASTM C-127)
B. WATER ABSORPTION NOT MORE THAN 2.5% (ASTM C-127)
C. FREEZE/THAW (25 CYCLES) LESS THAN 5% LOSS (ASTM C-666)
D. EXPANSIVE BREAKDOWN IN ETHYLENE GLYCOL (15 CYCLES) LESS THAN 8% LOSS (CRD-C148)
E. NOT MORE THAN 25% LOSS AT 1000 REVOLUTIONS, AS DETERMINED BY ASTM C-535
F. ALL STONE SHALL BE ANGULAR. ROUNDED AND SEMI-ROUNDED ROCK WILL NOT BE ACCEPTED.
H. ENROCKMENT STONE SHALL BE BLOCKY IN SHAPE, THE LEAST DIMENSION OF ANY ENROCKMENT STONE SHALL BE NOT LESS THAN 1/2 ITS GREATEST DIMENSION.
I. INDIVIDUAL ENROCKMENT STONE SHALL MEET THE MINIMUM WEIGHT REQUIREMENT SHOWN IN THE DRAWINGS.
J. THE LEAST DIMENSION OF ANY RIPRAP STONE SHALL BE NOT LESS THAN 1/3 ITS GREATEST DIMENSION.
K. RIPRAP STONE SHALL BE WELL GRADED (STONE SIZE EVENLY DISTRIBUTED THROUGHOUT RANGE) WITH WEIGHTS OF INDIVIDUAL STONES RANGING FROM AT LEAST 15 LBS. TO 110 LBS. MAX. WITH AT LEAST 50 PERCENT OF THE INDIVIDUAL STONES WEIGHING MORE THAN 50 LBS. (6 INCH TO 12 INCH STONE WITH A MEDIAN SIZE OF 8 INCHES AS MEASURED BY GRIZZLY OR VISUAL INSPECTION).
L. BEDDING STONE PLACED UNDER RIPRAP SHALL BE WELL GRADED (STONE SIZE EVENLY DISTRIBUTED THROUGHOUT RANGE) 0.5 INCH TO 2 INCH STONE AS MEASURED BY SIEVE OR GRIZZLY . W50 SHALL BE APPROXIMATELY 0.1 LBS.
L. FILTER STONE PLACED BEHIND ENROCKMENT SHALL BE WELL GRADED (STONE SIZE EVENLY DISTRIBUTED THROUGHOUT RANGE) 3/8 INCH TO 1 1/2 INCH STONE AS MEASURED BY SIEVE OR GRIZZLY. W50 SHALL BE APPROXIMATELY 0.8 LBS.
M. APRON STONE PLACED AT END OF STORM WATER DRAINAGE DITCH SHALL BE WELL GRADED (STONE SIZE EVENLY DISTRIBUTED THROUGHOUT RANGE) 6 INCH TO 12 INCH STONE AS MEASURED BY SIEVE OR GRIZZLY. W50 SHALL BE APPROXIMATELY 50 LBS.
N. EROSION PROTECTION ROCK AT BASE OF ENROCKMENT AFTER THE DRAINAGE DITCH SHALL BE SELECTED 12" STONE AS MEASURED BY SIEVE OR GRIZZLY. W50 SHALL BE APPROXIMATELY 85 LBS.

THERE IS NO DESIGNATED STONE SOURCE FOR THIS PROJECT. STONE SHALL BE FROM AN ESTABLISHED SOURCE APPROVED BY THE ENGINEER. PROVIDING ACCEPTABLE TEST RESULTS SHALL BE THE RESPONSIBILITY OF THE CONTRACTOR. TESTING SHALL BE BY A CERTIFIED INDEPENDENT COMMERCIAL TEST LABORATORY APPROVED BY THE ENGINEER. THE CONTRACTOR SHALL FURNISH CERTIFIED COMPLETE COPIES OF ALL TEST RESULTS TO THE ENGINEER A MINIMUM OF 3 WEEKS PRIOR TO ANY STONE PLACEMENT.
ALL ROCK MAY BE ACCEPTED OR REJECTED AT THE PROJECT SITE BASED ON TEST RESULTS AND VISUAL GEOLOGIC EXAMINATIONS BY THE ENGINEER.

RIPRAP PLACEMENT
RIPRAP STONE SHALL BE PLACED TO THE LINES AND GRADES SHOWN. RIPRAP STONE SHALL BE PLACED SUCH THAT IT FORMS A WELL KEYED, STABLE ROCK MASS WITH A RELATIVELY REGULAR SURFACE. PLACING ARMOR STONE THROUGH CHUTES, DROPPING STONE MORE THAN 1 FOOT, AND OTHER METHODS WHICH SEGREGATE OR DAMAGE THE STONE WILL NOT BE PERMITTED. THE FINISHED REVETMENT SURFACE SHALL BE FREE FROM AREAS OF STONE LESS THAN AVERAGE SIZE.

ENROCKMENT PLACEMENT
THE BASE COURSE OF ROCKS MUST BE EMBEDDED A MINIMUM OF 24 INCHES BELOW THE UNDISTURBED EARTH AS SHOWN IN THE DRAWINGS. BASE COURSE ROCK SHALL BE FIRMLY SET AND TIGHTLY FIT WITH THE LONG DIMENSION OF THE ROCKS EXTENDING INTO THE SLOPE BEHIND THE ROCKERY TO PROVIDE MAXIMUM STABILITY. SUBSEQUENT COURSES OF ROCKS MUST TIGHTLY FIT AND FIRMLY LOCK INTO THE ROCKS IN THE LOWER COARSE. ROCKS MAY BE RESET SEVERAL TIMES TO GET THE IDEAL FIT. THE ENROCKMENT INSTALLER MUST SCHEDULE INSPECTION PRIOR TO PLACEMENT OF THE BASE COURSE SO THE SOIL CONDITION, FOUNDATION PREPARATION AND STONE SIZE MAY BE VERIFIED. A FINAL INSPECTION IS ALSO REQUIRED ONCE ALL WORK IS COMPLETE. CHINK ROCK SHALL HAVE A MAXIMUM DIAMETER OF 4" ON THE SHORT DIMENSION. THE ROCKERY INSTALLER SHALL HAVE A MINIMUM OF 10 YEARS EXPERIENCE INCLUDING CONSTRUCTION OF SIMILAR SIZE OR LARGER, IN SIMILAR MARINE ENVIRONMENTS.

GEOTEXTILE
WOVEN GEOTEXTILE FILTER FABRIC SHALL BE MIRAFI FW700 OR APPROVED EQUAL. A MINIMUM 2-FOOT OVERLAP IS REQUIRED BETWEEN ADJACENT SECTIONS OF FABRIC. FABRIC SHALL BE TEMPORARILY PINNED AT 2 FOOT CENTERS INCLUDING PINNING UP CENTER OF OVERLAP. PINS SHALL BE REMOVED AS RIPRAP IS PLACED. FABRIC SHALL BE INSTALLED TO THE LIMITS INDICATED ON THE DRAWINGS.

COARSE SAND-GRAVEL BEACH MIX
BEACH MIX SHALL BE FREE OF DELETERIOUS OR OBJECTIONABLE MATERIAL EITHER NATURALLY OCCURRING OR PROCESSED; AND SHALL MEET THE FOLLOWING REQUIREMENTS FOR GRADING.

US STANDARD SIEVE/SCREEN SIZE	PERCENT PASSING BY WEIGHT
2 INCH	100
0.75 INCH	50 TO 90
0.375 INCH	30 TO 60
NO. 4	15 TO 45
NO. 100	0 TO 5

CRUSHED SURFACING PATH MATERIAL
CRUSHED SURFACING MATERIAL SHALL BE 1/4" MINUS PER WSDOT 9-03.4(2) NO. 4.

TEMPORARY EROSION AND STORMWATER CONTROL (TESC)
THE CONTRACTOR IS TO FOLLOW TESC GUIDELINES AS MARKED ON C-003. TRUCKS ARE TO BE KEPT ON THE EXISTING ASPHALT WHILE OFFLOADING AND LOADING MATERIAL. STRAW WATTLES ARE TO BE PLACED IN THE EXISTING DRAINAGE DITCH. DRAINAGE DITCH IS NOT TO BE DISTURBED EXCEPT FOR THE PORTION BELOW +15' MLLW. EXISTING TREES, AS MARKED, ARE NOT TO BE DISTURBED DURING CONSTRUCTION. DRIP PANS ARE TO BE USED UNDER CONSTRUCTION VEHICLES WHEN NOT IN USE.

HEALTH AND SAFETY
THE CONTRACTOR SHALL BE SOLELY RESPONSIBLE FOR THE PROJECT SITE CONDITIONS AND SAFETY DURING THE TERM OF THE CONTRACT. THIS OBLIGATION SHALL INCLUDE THE HEALTH AND SAFETY OF ALL PERSONS WITHIN OR AFFECTED BY THE LIMITS OF CONSTRUCTION AND ALL PROPERTY AFFECTED BY THE WORK. THE CONTRACTOR SHALL BE FULLY RESPONSIBLE TO COMPLY WITH ALL APPLICABLE FEDERAL, STATE AND LOCAL REGULATIONS, STANDARDS & CODES THAT APPLY TO THE CONTRACT.
THE CONTRACTOR SHALL BE RESPONSIBLE FOR MAINTAINING SITE SECURITY IN WORK AREAS. THE CONTRACTOR SHALL FURNISH AND POST SIGNS AT THE SITE WARNING THAT THE SITE CONTAINS HAZARDS AND THAT ACCESS IS FORBIDDEN TO UNAUTHORIZED PERSONNEL.

STAFF
THE CONTRACTOR SHALL PROVIDE THE SERVICES OF A FULL-TIME, THOROUGHLY EXPERIENCED AND QUALIFIED JOB SUPERINTENDENT WHO SHALL BE ASSIGNED TO THE JOB DURING THE COURSE OF THE WORK. THE PERSON DESIGNATED AS JOB SUPERINTENDENT SHALL HAVE DIRECT CHARGE OF THE WORK AND SHALL BE AUTHORIZED TO ACCEPT AND EXECUTE ALL ORDERS AND DIRECTIONS ISSUED BY THE CITY.

CITY OF BAINBRIDGE ISLAND
280 Madison Avenue North
Bainbridge Island, WA
206-842-2016

PUBLIC WORKS ENGINEERING DEPARTMENT

PROJECT INFORMATION

FLETCHER LANDING ROAD END IMPROVEMENTS

REVISION BLOCK

NO.	DATE	BY	REVISION

S20, T 25N, R2E, W.M.

Scale:
Horiz: NONE
Vert: NONE
Coordinate System: WASHINGTON STATE PLANE, NORTH NAD83/91 (HARN)
Vertical Datum: MLLW
Designed By: KJB
Drawn By: MRM\KJB
Inspected By: ?_____
W.O. No.: ?____
Issue Date: __-__-__

SHEET TITLE

GENERAL NOTES

Drawing No.
C-001

Sheet No. 3 Of 16

Filename: Fletcher Landing design rev15
XREF Filename:
Drawn By: MRM\KJB
Checked By: WJG
Section: __-S-__T_N-R_E
Surveyed By:
Date:
Control Monument:
Field Bk/Pg:
Recorded Survey: Kitsap County Auditor
AF- _____
Vol/Bk Page
EXISTING CONDITIONS/SITE SURVEY
Constructed By:

PROJECT CONTROL:

POINT#	NORTHING	EASTING	ELEV. (MLLW)	DESCRIPTION
1003	N: 239192.86'	E: 1210306.63'	17.13'	PK NAIL
1005	N: 239187.99'	E: 1210210.55'	15.84'	TACK
1020	N: 239199.44'	E: 1210296.72'	17.45'	FOUND 3/4" PIPE W/YELLOW CAP MARKED ADA
1021	N: 239197.79'	E: 1210385.61'	21.35'	FOUND 3/4" IRON PIPE W/YELLOW CAP MARKED ADA#8894
1022	N: 239196.30'	E: 1210453.89'	24.57'	REBAR
1023	N: 239160.02'	E: 1210453.23'	25.12'	REBAR

PROJECT BASELINE:

STATION#	NORTHING	EASTING
0+00.00	N: 239182.67'	E: 1210206.38'
1+00.00	N: 239182.67'	E: 1210306.38'
2+00.00	N: 239182.67'	E: 1210406.38'

HORIZONTAL DATUM:

THE HORIZONTAL DATUM FOR THE SURVEY IS NAD 1983, WASHINGTON STATE PLANE COORDINATE SYSTEM, NORTH ZONE. BASIS OF POSITION IS CENTERLINE OF CENTRAL AVE AS SHOWN ON THE REFERENCED SURVEY.

VERTICAL DATUM:

THE VERTICAL DATUM FOR THIS SURVEY IS MEAN LOWER LOW WATER (MLLW), BASED ON ELEVATIONS FROM THE RECORD OF SURVEY.
CONVERSION EQUATION: MLLW = NAVD88 + 2.51'
PROJECT BENCHMARK: STA. 1021 ELEV: 21.35'

NOTES:

1. EXISTING CONDITIONS REFERENCE THE FIELD SURVEY TAKEN BY SAEZ CONSULTING ENGINEERS (SCE) ON JANUARY 14, 2015.
2. CONTOUR INTERVAL = 1 FOOT.
3. A TITLE REPORT FOR THIS PROPERTY WAS NOT FURNISHED AT THE TIME OF THE SURVEY. EXISTING EASEMENTS SHOWN ARE TAKEN FROM THE REFERENCED SURVEY. OTHER COVENANTS, CONDITIONS AND RESTRICTIONS ARE NOT SHOWN. IT SHOULD BE NOTED THAT IN PREPARING THIS SURVEY MAP, SCE INC. HAS NOT CONDUCTED AN INDEPENDENT TITLE SEARCH NOR IS SCE AWARE OF ANY TITLE ISSUES AFFECTING THE PROPERTY OTHER THAN THOSE SHOWN ON THIS MAP.
5. RECORD OF SURVEY RECORDED JULY 23, 1996, VOL 0045, PAGE 147, RECORDS KITSAP COUNTY, WA. PERFORMED BY MACLEARNSBERRY, INC.

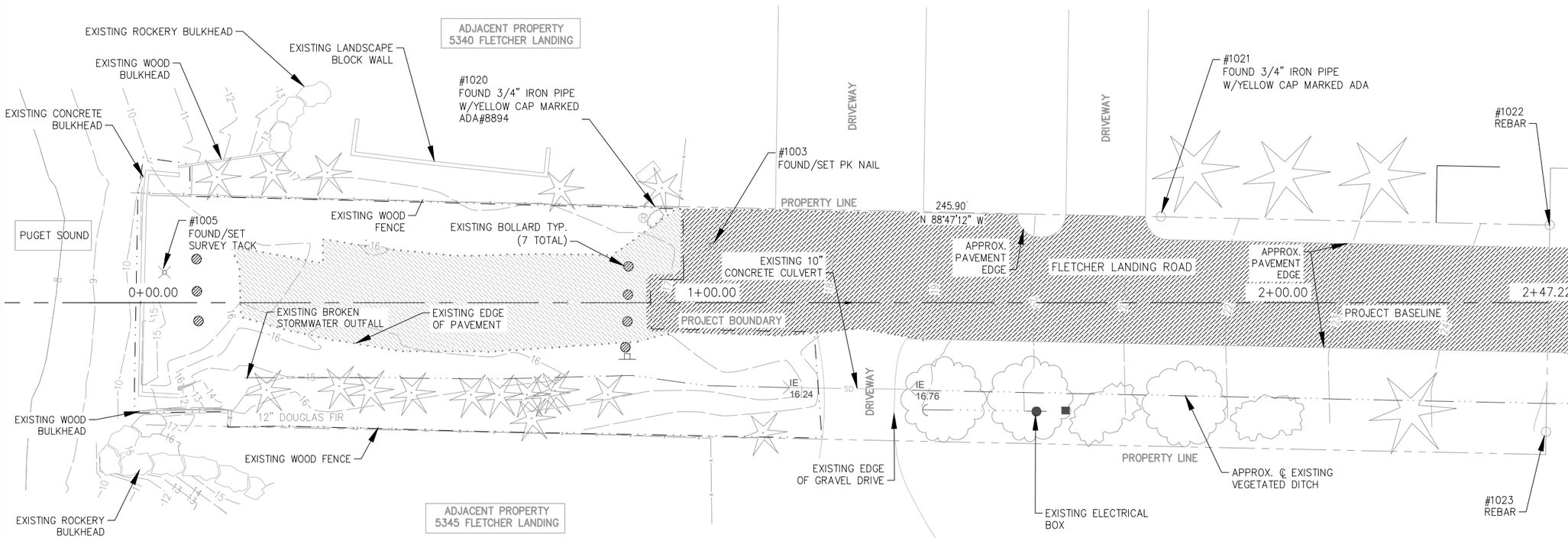

LEGEND:

- FENCE LINE
- EXISTING BOLLARD
- EXISTING EDGE OF PAVEMENT
- EXISTING ASPHALT
- EXISTING STRUCTURES
- EXISTING ROCKERY BULKHEAD
- PROJECT BASELINE
- PROPERTY/EASEMENT LINE

EXISTING CONDITIONS

10 0 10 20
SCALE OF FEET

CITY OF BAINBRIDGE ISLAND
280 Madison Avenue North
Bainbridge Island, WA
206-842-2016

PUBLIC WORKS ENGINEERING DEPARTMENT

PROJECT INFORMATION

FLETCHER LANDING ROAD END IMPROVEMENTS

REVISION BLOCK

NO.	DATE	BY	REVISION

S20, T 25N, R2E, W.M.

Scale: Horiz: 1"=20' Vert: NONE
Coordinate System: WASHINGTON STATE PLANE, NORTH NAD83/91 (HARN)
Vertical Datum: MLLW
Designed By: KJB
Drawn By: MRM\KJB
Inspected By: ?
W.O. No.: ?
Issue Date:

SHEET TITLE

EXISTING CONDITIONS

Drawing No. C-002

Sheet No. 4 Of 16

Constructed By: PRE SURVEY
Recorded Survey: Kitsap County Auditor AF# EXISTING CONDITIONS Vol/Bk Page
Control Monument: Field Bk/Pg:
Surveyed By: Date:
Section: S T N R E
Drawn By: MRM\KJB Checked By: WJG
Filename: Fletcher Landing design rev15
XREF Filename:

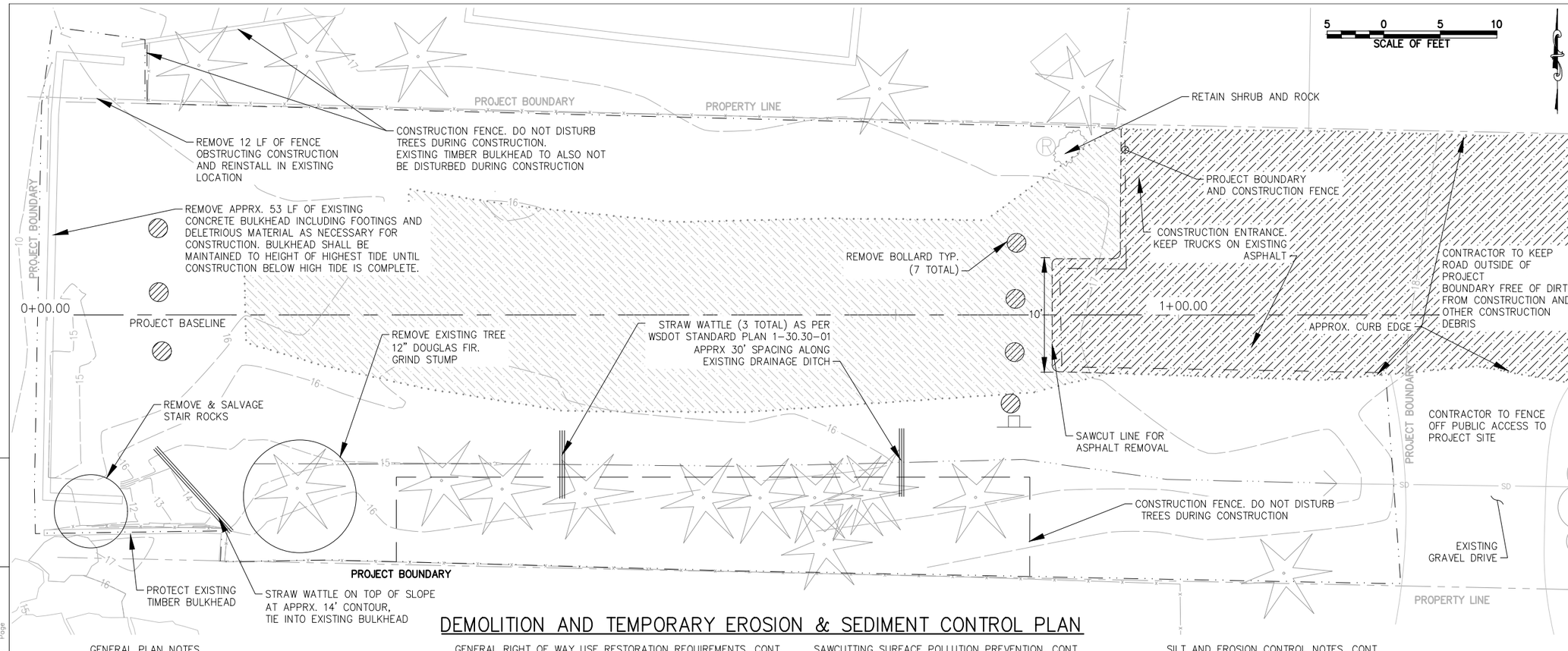

DEMOLITION AND TEMPORARY EROSION & SEDIMENT CONTROL PLAN

GENERAL PLAN NOTES

- ALL WORKMANSHIP AND MATERIALS SHALL CONFORM TO THE CITY'S REQUIREMENTS AND SPECIFICATIONS.
- STANDARD SPECIFICATIONS SHALL BE THE CURRENT APWA MANUAL AS MODIFIED BY THE CITY, INCLUDING THE CITY'S STANDARD DRAWINGS, SPECIFICATIONS, AND REQUIREMENTS
- A COPY OF THESE APPROVED PLANS AND APPLICABLE SPECIFICATIONS AND DRAWINGS SHALL BE ON SITE DURING CONSTRUCTION
- A PRE-CONSTRUCTION MEETING SHALL BE REQUIRED PRIOR TO ANY ON-SITE WORK
- PRIOR TO STARTING CONSTRUCTION, THE CONTRACTOR SHALL CALL THE UNDERGROUND UTILITIES LOCATION CENTER AT 1-800-424-5555 FOR UTILITY LOCATIONS (WATER, SANITARY SEWER, STORM SEWER, GAS, POWER, TELEPHONE, AND TELEVISION
- DURING CONSTRUCTION, THE CONTRACTOR SHALL BE REQUIRED TO CONTROL ON-SITE STORM WATER RUNOFF BY USING TEMPORARY OR PERMANENT DRAINAGE EROSION/SILTATION CONTROL PROCEDURES
- LOCATIONS OF EXISTING UTILITIES IS APPROXIMATE. ACTUAL LOCATIONS SHALL BE FIELD VERIFIED.

GENERAL RIGHT OF WAY USE RESTORATION REQUIREMENTS

- SIGNING, FLAGGING AND TRAFFIC CONTROL SHALL BE IN ACCORDANCE WITH THE MOST CURRENT EDITION OF THESE STANDARDS: THE WSDOT TRAFFIC MANUAL AND THE MANUAL OF UNIFORM TRAFFIC CONTROL. CITY OF BAINBRIDGE ISLAND WILL PUBLISH ROAD CLOSURE IN ADVANCE OF WORK STARTING
- THE CONTRACTOR IS REQUIRED TO SUBMIT A TRAFFIC CONTROL PLAN AND DETOUR PLAN TWO WEEKS PRIOR TO ANY ROAD CLOSURE FOR APPROVAL BY THE CITY OF BAINBRIDGE ISLAND PROJECT MANAGER
- EXISTING DRAINAGE DITCHES, CULVERTS, ETC SHALL BE KEPT CLEAN AT ALL TIMES. TEMPORARY DIVERSION OF THE DRAINAGE SYSTEM MAY BE NECESSARY. ANY DAMAGED CULVERT, CATCH BASIN, MANHOLE OR OTHER DRAINAGE STRUCTURE DISTURBED BY EXCAVATION OR PUMPING OPERATION SHALL BE REPLACED WITH NEW MATERIAL OR REPAIRED TO THE SATISFACTION OF THE ENGINEER. TEMPORARY EROSION & SEDIMENTATION CONTROL MEASURES SHALL BE EMPLOYED TO PROTECT ADJACENT PROPERTY AND STORM DRAINAGE FACILITIES.

GENERAL RIGHT OF WAY USE RESTORATION REQUIREMENTS, CONT.

- GRAVEL SHOULDERS DISTURBED BY EXCAVATION SHALL BE SHAPED TO CITY STANDARDS AND PROVIDED WITH A MINIMUM OF 2" COMPACTED CRUSHED SURFACE TOP COURSE GRAVEL
- ALL PIPES OR OTHER MATERIAL STORED ALONG THE CITY RIGHT OF WAY MUST BE SECURED AT A SAFE DISTANCE FROM THE TRAVELED ROADWAY IN SUCH A MANNER AS TO AVOID FALLING ONTO THE ROADWAY
- NO EXCESS OR UNSUITABLE MATERIAL SHALL BE WASTED ON CITY RIGHT OF WAY, NOR DUMPED ON PRIVATE PROPERTY
- STREET SURFACES SHALL BE CLEANED AT THE END OF EACH DAY'S OPERATION WITH A POWER BROOM OR OTHER APPROVED MEANS
- NO OPEN CUT OF CITY ROADS OR STREETS SHALL BE MADE WITHOUT APPROVAL OF THE CITY ENGINEER
- AT THE END OF THE DAY, ALL TRENCHES MUST BE BACKFILLED OR COVERED WITH STEEL PLATES AND BARRICADED WITH FLASHING WARNING LIGHTS TO PREVENT PEOPLE OR ANIMALS FROM FALLING INTO THE TRENCH

NOTES – SITE SPECIFIC

- THE CONTRACTOR IS TO FOLLOW TESC GUIDELINES AS MARKED AND SPECIFIED IN WSDOT STANDARD SPECIFICATIONS, CURRENT EDITION. TRUCKS ARE TO BE KEPT ON THE EXISTING ASPHALT WHILE LOADING AND OFFLOADING MATERIAL. STRAW WATTLES ARE TO BE PLACED IN THE EXISTING DRAINAGE DITCH AND CLEARED OF COLLECTED SEDIMENT AS PER WSDOT. EXISTING TREES, AS MARKED, ARE NOT TO BE DISTURBED DURING CONSTRUCTION. DRIP PANS ARE TO BE USED UNDER CONSTRUCTION VEHICLES WHEN NOT IN USE.

SAWCUTTING SURFACE POLLUTION PREVENTION

- SLURRY AND CUTTINGS SHALL BE VACUUMED DURING CUTTING AND SURFACING OPERATIONS
- SLURRY AND CUTTINGS SHALL NOT REMAIN ON PERMANENT CONCRETE OR ASPHALT PAVEMENT OVERNIGHT
- SLURRY AND CUTTINGS SHALL NOT DRAIN TO ANY NATURAL OR CONSTRUCTED DRAINAGE CONVEYANCE
- COLLECTED SLURRY AND CUTTINGS SHALL BE DISPOSED OF IN A MANNER THAT DOES NOT VIOLATE GROUNDWATER OR SURFACE WATER QUALITY STANDARDS

SAWCUTTING SURFACE POLLUTION PREVENTION, CONT.

- PROCESS WATER THAT IS GENERATED DURING HYDRO-DEMOLITION, SURFACE ROUGHENING OR SIMILAR OPERATIONS SHALL NOT DRAIN TO ANY NATURAL OR CONSTRUCTED DRAINAGE CONVEYANCE AND SHALL BE DISPOSED OF IN A MANNER THAT DOES NOT VIOLATE GROUNDWATER OR SURFACE WATER QUALITY STANDARDS
- CLEANING WASTE MATERIAL AND DEMOLITION DEBRIS SHALL BE HANDLED AND DISPOSED OF IN A MANNER THAT DOES NOT CAUSE CONTAMINATION OF WATER. IF THE AREA IS SWEPT WITH A PICK-UP SWEEPER, THE MATERIAL MUST BE HAULED OUT OF THE AREA TO AN APPROPRIATE DISPOSAL SITE

CONTINUALLY MONITOR OPERATIONS TO DETERMINE WHETHER SLURRY, CUTTINGS, OR PROCESS WATER COULD ENTER WATERS OF THE STATE. IF INSPECTIONS SHOW THAT A VIOLATION OF WATER QUALITY STANDARDS COULD OCCUR, STOP OPERATIONS AND IMMEDIATELY IMPLEMENT PREVENTATIVE MEASURES SUCH AS BERMS, BARRIERS, SECONDARY CONTAINMENT, AND VACUUM TRUCKS AS REQUIRED.

SILT AND EROSION CONTROL NOTES

APPROVAL OF THIS EROSION/SEDIMENTATION CONTROL (ESC) PLAN DOES NOT CONSTITUTE AN APPROVAL OF PERMANENT ROAD OR DRAINAGE DESIGN (E.G. SIZE AND LOCATION OF ROADS, PIPES, RESTRICTORS, CHANNELS, RETENTION FACILITIES, UTILITIES, ETC.)

THE IMPLEMENTATION OF THESE ESC PLANS AND CONSTRUCTION, MAINTENANCE, REPLACEMENT, AND UPGRADING OF THESE ESC FACILITIES IS THE RESPONSIBILITY OF THE APPLICANT/CONTRACTOR UNTIL ALL CONSTRUCTION IS COMPLETED AND APPROVED AND VEGETATION/LANDSCAPING IS ESTABLISHED.

THE ESC FACILITIES SHOWN ON THIS PLAN MUST BE CONSTRUCTED IN CONJUNCTION WITH ALL CLEARING AND GRADING ACTIVITIES, AND IN SUCH A MANNER AS TO ENSURE THAT SEDIMENT AND SEDIMENT LADEN WATER DO NOT ENTER THE DRAINAGE SYSTEM, ROADWAYS, OR VIOLATE WATER STANDARDS.

SILT AND EROSION CONTROL NOTES, CONT.

THE ESC FACILITIES SHOWN ON THIS PLAN ARE THE MINIMUM REQUIREMENTS FOR ANTICIPATED SITE CONDITIONS. DURING THE CONSTRUCTION PERIOD, THESE ESC FACILITIES SHALL BE UPGRADED AS NEEDED FOR UNEXPECTED STORM EVENTS AND TO ENSURE THAT SEDIMENT-LADEN WATER DO NOT LEAVE THE SITE.

THE ESC FACILTIES SHALL BE INSPECTED DAILY BY THE APPLICANT/CONTRACTOR AND MAINTAINED AS NECESSARY TO ENSURE THEIR CONTINUED FUNCTIONING.

THE ESC FACILITIES ON INACTIVE SITES SHALL BE INSPECTED AND MAINTAINED A MINIMUM OF ONCE A MONTH OR WITHIN THE 48 HOURS FOLLOWING A MAJOR STORM EVENT.

AT NO TIME SHALL MORE THAN ONE FOOT OF SEDIMENT BE ALLOWED TO ACCUMULATE WITHIN A TRAPPED CATCH BASIN. ALL CATCH BASINS AND CONVEYANCE LINES SHALL BE CLEANED PRIOR TO PAVING. THE CLEANING OPERATION SHALL NOT FLUSH SEDIMENT LADEN WATER INTO THE DOWNSTREAM SYSTEM.

STABILIZED CONSTRUCTION ENTRANCES SHALL BE INSTALLED AT THE BEGINNING OF CONSTRUCTION AND MAINTAINED FOR THE DURATION OF THE PROJECT. ADDITIONAL MEASURES MAY BE REQUIRED TO INSURE THAT ALL PAVED AREAS ARE KEPT CLEAN FOR THE DURATION OF THE PROJECT.

ALL TEMPORARY EROSION & SEDIMENT CONTROL MATERIALS SHALL BE REMOVED AFTER CONSTRUCTION HAS BEEN COMPLETED AND ACCEPTED, AND ALL CLEANUP HAS BEEN COMPLETED.

CITY OF BAINBRIDGE ISLAND
280 Madison Avenue North
Bainbridge Island, WA
206-842-2016

PUBLIC WORKS ENGINEERING DEPARTMENT

PROJECT INFORMATION

FLETCHER LANDING ROAD END IMPROVEMENTS

REVISION BLOCK

NO.	DATE	BY	REVISION

S20, T 25N, R2E, W.M.

Scale: Horiz: 1"=10' Vert: NONE
Coordinate System: WASHINGTON STATE PLANE, NORTH NAD83/91 (HARN)
Vertical Datum: MLLW
Designed By: KJB
Drawn By: MRM\KJB
Inspected By:
W.O. No.:
Issue Date: 04-08-2016

SHEET TITLE

DEMOLITION AND TEMPORARY EROSION & SEDIMENT CONTROL PLAN

Drawing No. C-003

Sheet No. 5 Of 16

Constructed By: Date:
Recorded Survey Kitsap County Auditor AF- Vol/Bk Page
Control Monument: Field Bk/Pg:
Surveyed By: Date:
Section: S T N R E
Drawn By: MRM\KJB Checked By: WJG
Filename: Fletcher rev 11_4
XREF Filename:

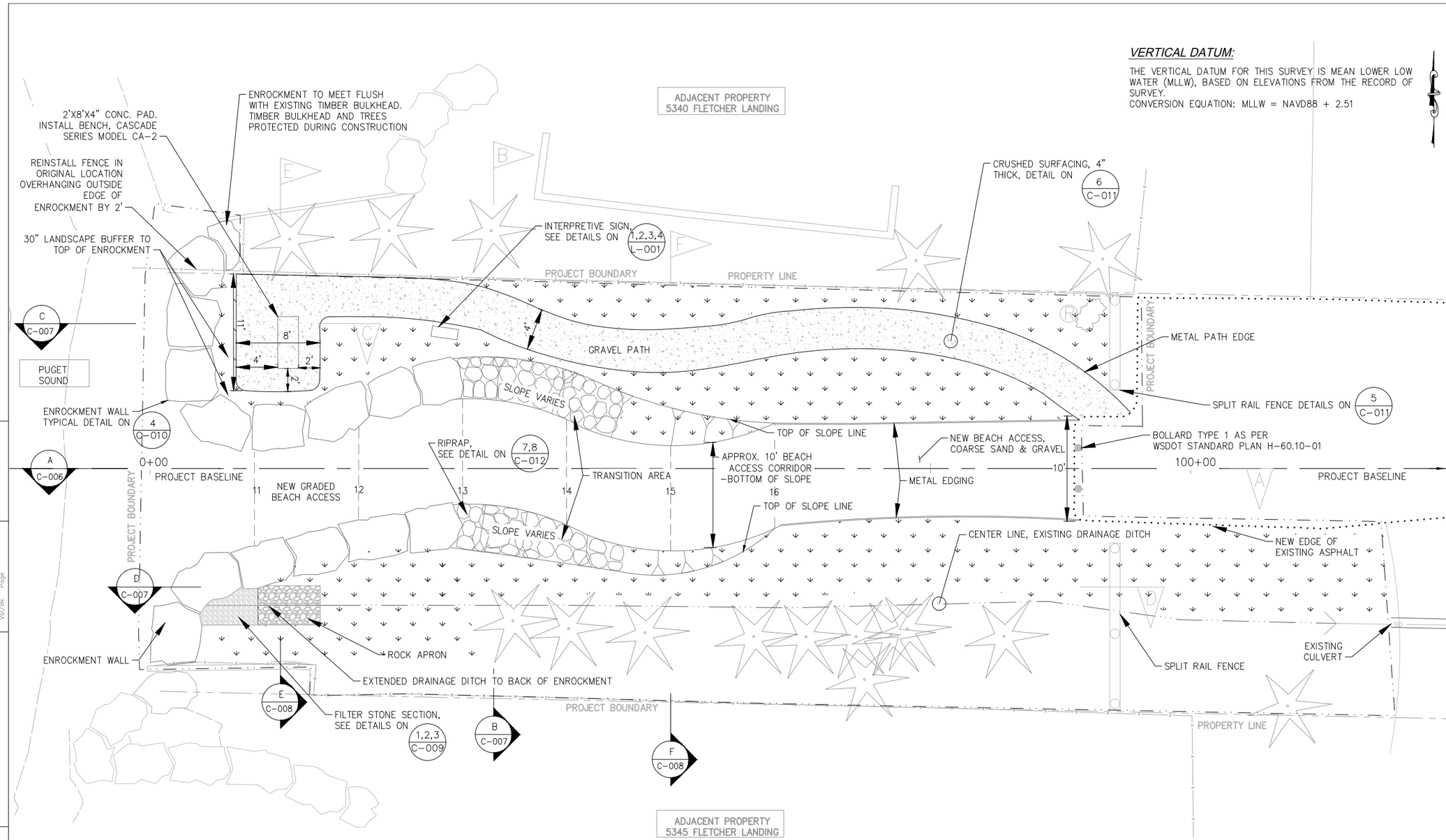

VERTICAL DATUM:

THE VERTICAL DATUM FOR THIS SURVEY IS MEAN LOWER LOW WATER (MLLW), BASED ON ELEVATIONS FROM THE RECORD OF SURVEY.
CONVERSION EQUATION: MLLW = NAVD88 + 2.51

LEGEND:

- FENCE LINE
- NEW EXTENDED FILTER STONE
- NEW ROCK APRON
- UPLAND VEGETATION
- NEW ENROCKMENT WALL
- EXISTING STRUCTURES
- EXISTING ROCKERY BULKHEAD
- PROJECT BASELINE
- PROPERTY/EASEMENT LINE

LAYOUT PLAN

5 0 5 10
SCALE OF FEET

CITY OF BAINBRIDGE ISLAND
280 Madison Avenue North
Bainbridge Island, WA
206-842-2016

PUBLIC WORKS ENGINEERING DEPARTMENT

PROJECT INFORMATION

FLETCHER LANDING ROAD END IMPROVEMENTS

REVISION BLOCK

NO.	DATE	BY	REVISION

S20, T 25N, R2E, W.M.

Scale:
Horiz: 1"=10'
Vert: NONE
Coordinate System: WASHINGTON STATE PLANE, NORTH NAD83/91 (HARN)
Vertical Datum: MLLW
Designed By: KJB
Drawn By: MRM\KJB
Inspected By: ?_____
W.O. No.: WJG
Issue Date: __-__-__

SHEET TITLE

DESIGN PLAN

Drawing No.
C-004

Sheet No. 6 Of 16

Constructed By: Date:
Recorded Survey: Kitsap County Auditor AF# Vol/Bk Page
Control Monument: Field Bk/Pg:
Surveyed By: Date:
Section: __S__T_N_R_E
Drawn By: MRM\KJB Checked By: WJG
Filename: Fletcher rev 11_4
XREF Filename:

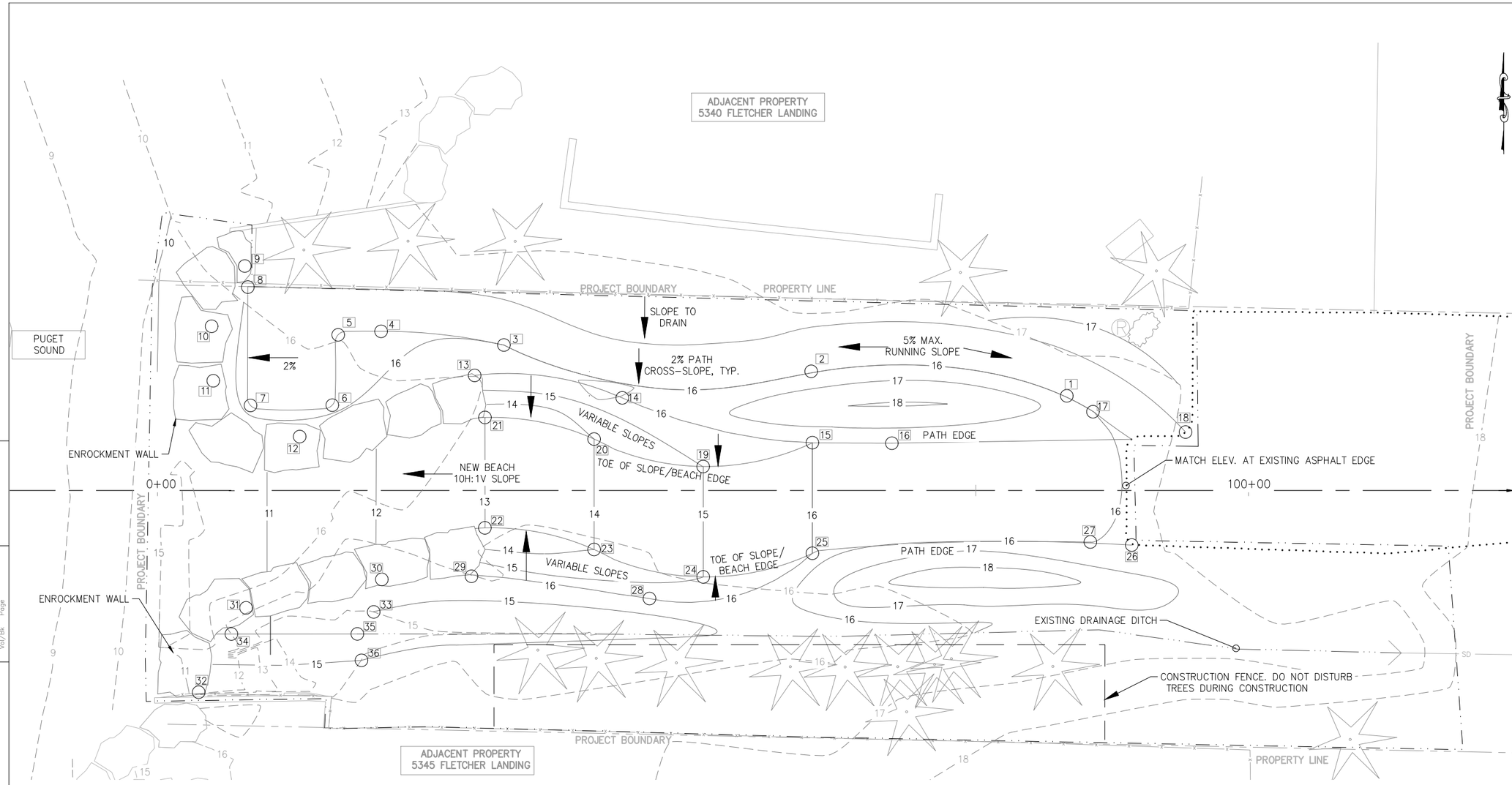

GRADING PLAN

5 0 5 10
SCALE OF FEET

FINISHED GRADE POINT TABLE

POINT#	NORTHING	EASTING	ELEV. (MLLW)	DESCRIPTION
1	N: 239191.26'	E: 1210289.70'	16.0'	CRUSHED SURFACING GRAVEL PATH, FAR EDGE 4' TO NORTH
2	N: 239193.59'	E: 1210266.29'	16.0'	CRUSHED SURFACING GRAVEL PATH, FAR EDGE 4' TO NORTH
3	N: 239196.01'	E: 1210238.13'	16.0'	CRUSHED SURFACING GRAVEL PATH, FAR EDGE 4' TO NORTH
4	N: 239197.26'	E: 1210226.87'	16.0'	CRUSHED SURFACING GRAVEL PATH, FAR EDGE 4' TO NORTH
5	N: 239196.94'	E: 1210222.94'	16.4'	CRUSHED SURFACING GRAVEL PATH
6	N: 239190.49'	E: 1210222.40'	16.4'	CRUSHED SURFACING GRAVEL PATH
7	N: 239190.49'	E: 1210214.90'	16.2'	CRUSHED SURFACING GRAVEL PATH
8	N: 239201.37'	E: 1210214.66'	16.2'	CRUSHED SURFACING GRAVEL PATH
9	N: 239203.25'	E: 1210214.38'	16.0'	APPRX. TOP OF ENROCKMENT
10	N: 239197.73'	E: 1210211.33'	16.0'	APPRX. TOP OF ENROCKMENT
11	N: 239192.68'	E: 1210211.49'	16.0'	APPRX. TOP OF ENROCKMENT
12	N: 239187.61'	E: 1210219.41'	16.0'	APPRX. TOP OF ENROCKMENT
13	N: 239193.24'	E: 1210235.55'	16.0'	APPRX. TOP OF ENROCKMENT, NEW 16' CONTOUR
14	N: 239191.16'	E: 1210248.98'	16.0'	TOP OF SLOPE
15	N: 239187.04'	E: 1210266.40'	16.0'	TOE OF SLOPE, BEACH EDGE
16	N: 239187.01'	E: 1210273.69'	16.0'	PATH EDGE
17	N: 239189.77'	E: 1210292.22'	16.0'	PATH EDGE
18	N: 239187.32'	E: 1210301.24'	17.1'	PATH EDGE, TIE INTO NEW EDGE OF ASPHALT
19	N: 239184.87'	E: 1210256.40'	15.0'	TOE OF SLOPE, BEACH EDGE
20	N: 239187.38'	E: 1210246.40'	14.0'	TOE OF SLOPE, BEACH EDGE
21	N: 239189.37'	E: 1210236.40'	13.0'	TOE OF SLOPE, BEACH EDGE
22	N: 239179.24'	E: 1210236.44'	13.0'	TOE OF SLOPE, BEACH EDGE
23	N: 239177.24'	E: 1210246.40'	14.0'	TOE OF SLOPE, BEACH EDGE
24	N: 239174.74'	E: 1210256.40'	15.0'	TOE OF SLOPE, BEACH EDGE
25	N: 239176.91'	E: 1210266.41'	16.0'	TOE OF SLOPE, BEACH EDGE
26	N: 239177.66'	E: 1210295.68'	16.9'	PATH EDGE, TIE INTO NEW EDGE OF ASPHALT
27	N: 239177.94'	E: 1210291.89'	16.0'	PATH EDGE
28	N: 239172.75'	E: 1210251.50'	16.0'	TOP OF SLOPE
29	N: 239175.07'	E: 1210235.14'	16.0'	APPRX. TOP OF ENROCKMENT, NEW 16' CONTOUR
30	N: 239174.55'	E: 1210226.88'	16.0'	APPRX. TOP OF ENROCKMENT
31	N: 239171.85'	E: 1210214.67'	16.0'	APPRX. TOP OF ENROCKMENT
32	N: 239166.71'	E: 1210211.44'	16.0'	APPRX. TOP OF ENROCKMENT
33	N: 239171.53'	E: 1210226.19'	15.0'	NEW 15' CONTOUR
34	N: 239169.51'	E: 1210213.15'	14.9'	TOP OF 3:1 GRAVEL SLOPE WITHIN NEW DRAINAGE DITCH
35	N: 239169.51'	E: 1210224.69'	14.4'	NEW DRAINAGE DITCH
36	N: 239167.10'	E: 1210225.07'	15.0'	NEW 15' CONTOUR

CURVE TABLE

CURVE	RADIUS	LENGTH	ANGLE
(1–2)	44.8'	24.2'	30.9°
(2–3)	38.6'	30.0'	43.7°
(3–4)	49.1'	11.4'	13.4°
(9–11)	15.4'	11.2'	41.8°
(11–12)	6.0'	10.8'	103.2°
(13–14)	26.0'	13.8'	30.5°
(14–15)	47.6'	18.0'	21.7°
(19–15)	22.9'	10.3'	25.8°
(16–17)	37.0'	19.0'	29.3°
(20–19)	21.4'	10.4'	27.9°
(21–20)	22.9'	10.3'	25.9°
(22–23)	23.0'	10.3'	25.7°
(23–24)	21.5'	10.4'	27.8°
(24–25)	23.1'	10.3'	25.7°
(25–27)	148.7'	25.5'	9.8°
(27–26)	14.8'	15.4'	59.4°
(25–28)	17.1'	16.0'	53.8°
(32–31)	6.0'	10.2'	97.8°

CITY OF BAINBRIDGE ISLAND
280 Madison Avenue North
Bainbridge Island, WA
206-842-2016

PUBLIC WORKS ENGINEERING DEPARTMENT

PROJECT INFORMATION

FLETCHER LANDING ROAD END IMPROVEMENTS

REVISION BLOCK

NO.	DATE	BY	REVISION

S__, T 25N, R2E, W.M.

Scale:
Horiz: 1"= 10'
Vert: NONE
Coordinate System: WASHINGTON STATE PLANE, NORTH NAD83/91 (HARN)
Vertical Datum: MLLW
Designed By: KJB
Drawn By: MRM\KJB
Inspected By: ?____
W.O. No.: ?____
Issue Date: __-__-__

SHEET TITLE

GRADING PLAN

Drawing No. C-005

Sheet No. 7 Of 16

Constructed By: Date:
Recorded Survey Kitsap County Auditor AF- Vol/Bk Page
Control Monument: Field Bk/Pg:
Surveyed By: Date:
Section: __-S-__-T_N-R_E
Drawn By: MRM\KJB Checked By: WJG
Filename: Fletcher rev 11_4
XREF Filename:

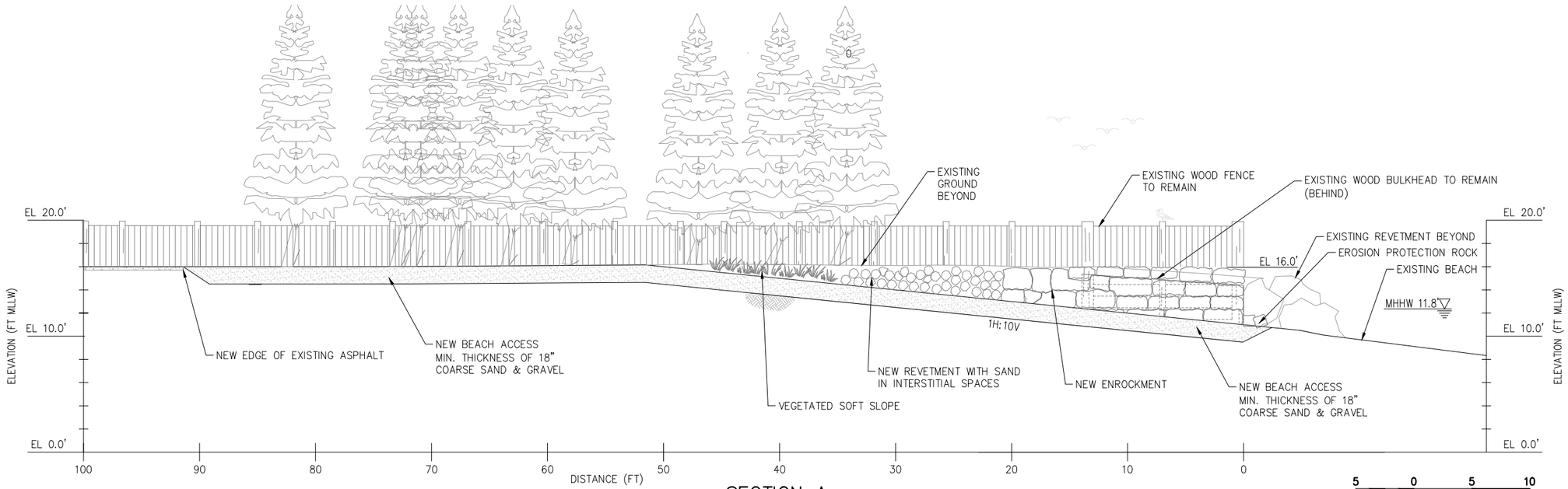

SECTION A
1" = 12' ON 11X17

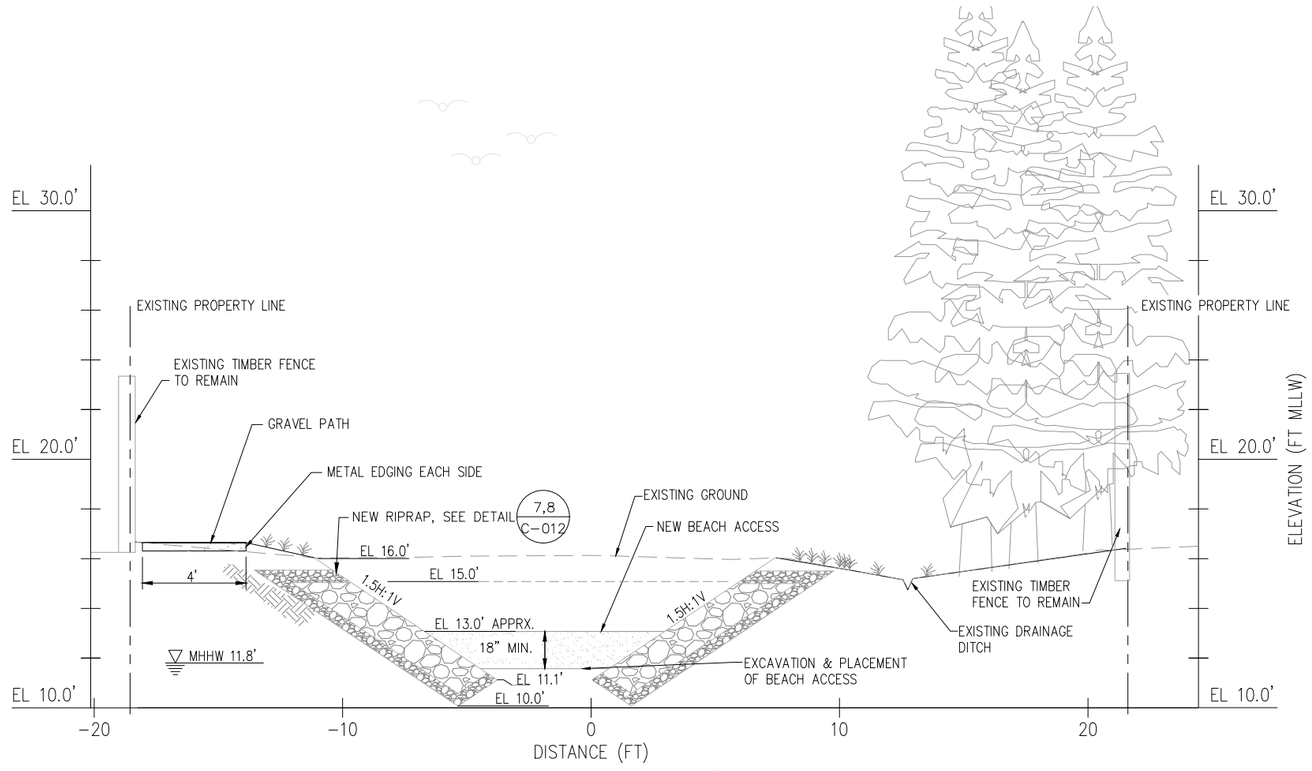

SECTION B – STN 0+33'
1" = 10' ON 11X17

CITY OF BAINBRIDGE ISLAND
280 Madison Avenue North
Bainbridge Island, WA
206-842-2016

PUBLIC WORKS ENGINEERING DEPARTMENT

PROJECT INFORMATION

FLETCHER LANDING ROAD END IMPROVEMENTS

REVISION BLOCK

NO.	DATE	BY	REVISION

S20, T 25N, R2E, W.M.

Scale:
Horiz: 1"= VARIES
Vert: NONE
Coordinate System: WASHINGTON STATE PLANE, NORTH NAD83/91 (HARN)
Vertical Datum: MLLW
Designed By: KJB
Drawn By: MRM\KJB
Inspected By: ?_____
W.O. No.: ?____
Issue Date: __-__-__

SHEET TITLE

SECTION TRANSECTS A & B

Drawing No.
C-006

Sheet No. 8 Of 16

Constructed By: Date:
Recorded Survey Kitsap County Auditor AF- Vol/Bk Page
Control Monument: Field Bk/Pg:
Surveyed By: Date:
Section: __S-__T_N-R_E
Drawn By: MRM\KJB Checked By: WJG
Filename: Fletcher rev 11_4
XREF Filename:

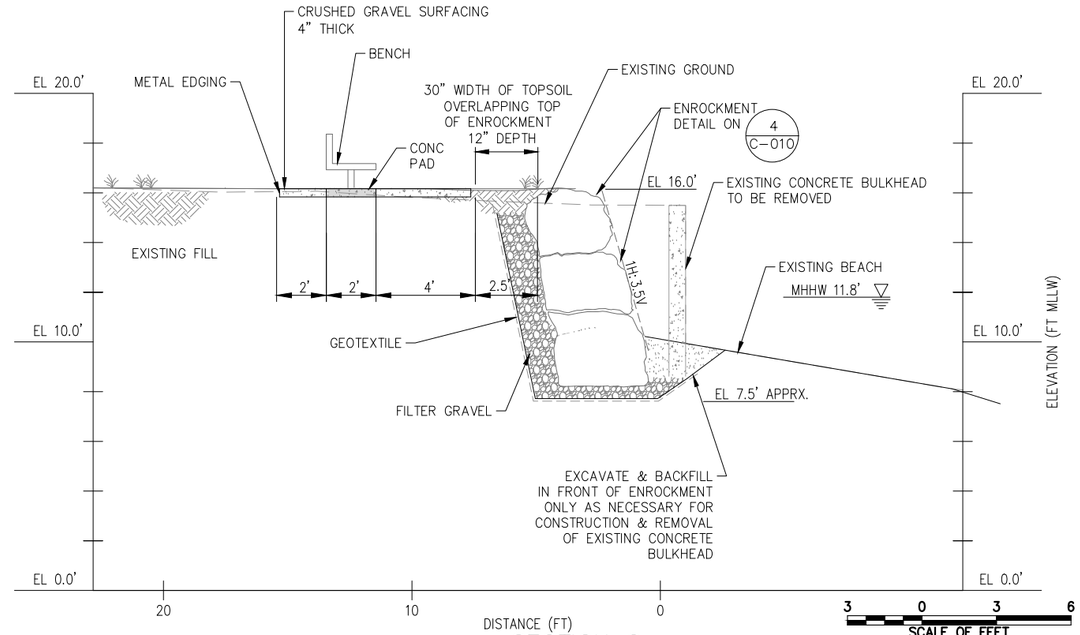

SECTION C
1" = 6' ON 11X17

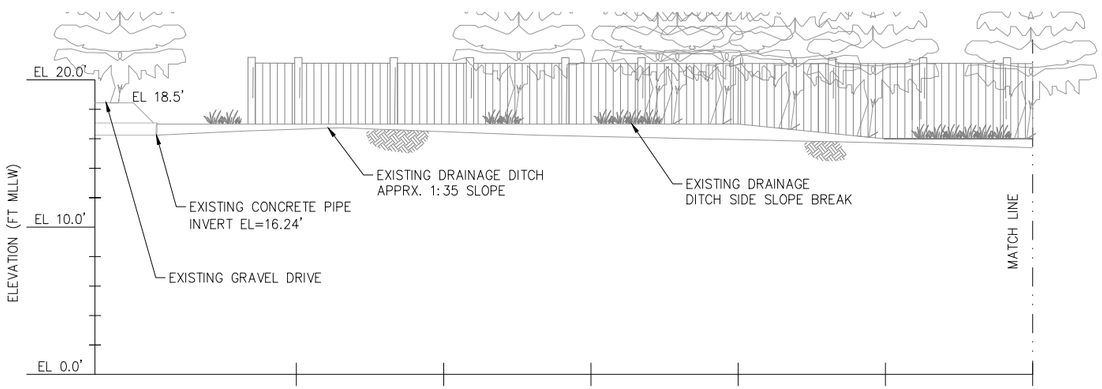

SECTION D
1" = 10' ON 11X17

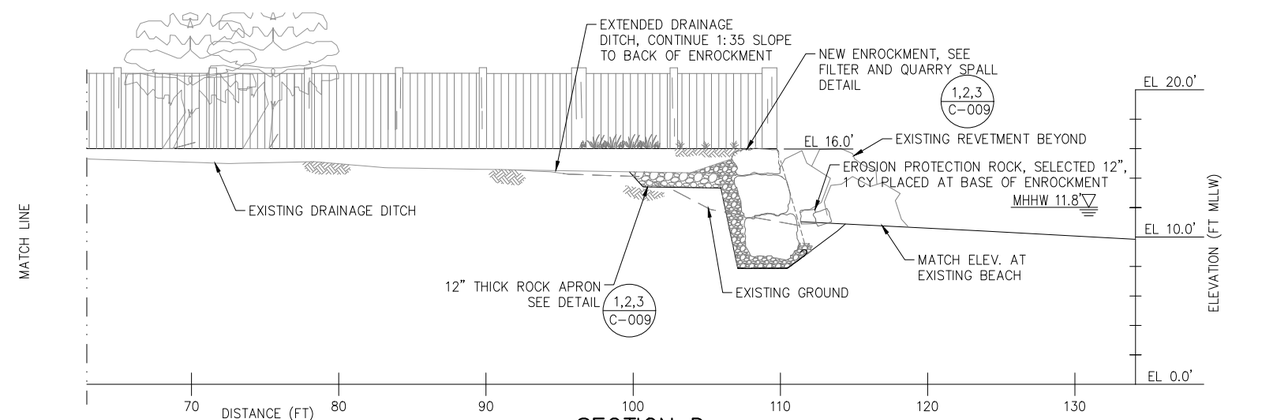

SECTION D
1" = 10' ON 11X17

CITY OF BAINBRIDGE ISLAND
280 Madison Avenue North
Bainbridge Island, WA
206-842-2016

PUBLIC WORKS ENGINEERING DEPARTMENT

PROJECT INFORMATION

FLETCHER LANDING ROAD
END IMPROVEMENTS

REVISION BLOCK

NO.	DATE	BY	REVISION

S20, T 25N, R2E, W.M.

Scale:
Horiz: 1"= VARIES
Vert: NONE
Coordinate System:
WASHINGTON STATE PLANE, NORTH NAD83/91 (HARN)
Vertical Datum:
MLLW
Designed By:
KJB
Drawn By:
MRM\KJB
Inspected By:
?_____
W.O. No.:
?_____
Issue Date:
__-__-__

SHEET TITLE

SECTION
TRANSECTS
C & D

Drawing No.
C-007

Sheet No. 9 Of 16

Constructed By:
Date:
Recorded Survey
Kitsap County Auditor
AF#
Vol/Bk Page
Control Monument:
Field Bk/Pg:
Surveyed By:
Date:
Section: __S__ T_N-R_E
Drawn By: MRM\KJB
Checked By: WJG
Filename: Fletcher rev 11_4
XREF Filename:

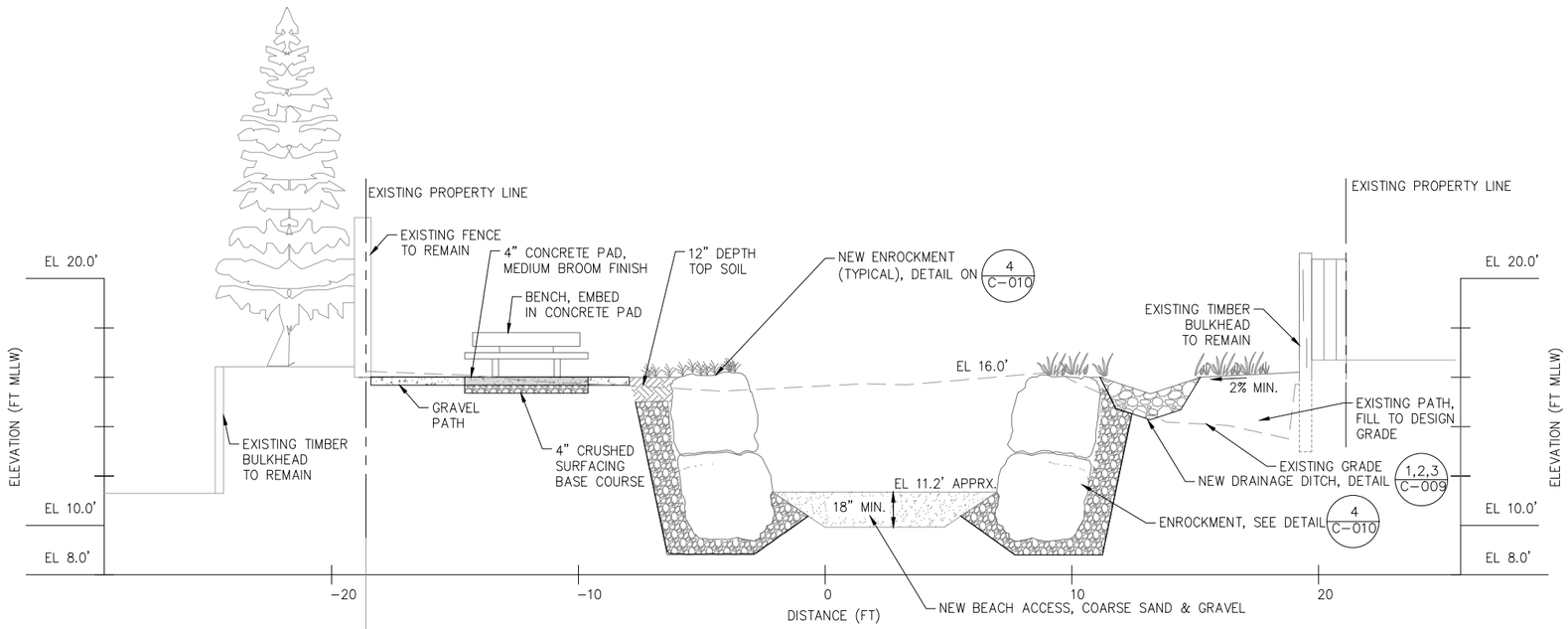

SECTION E – STN 0+12'

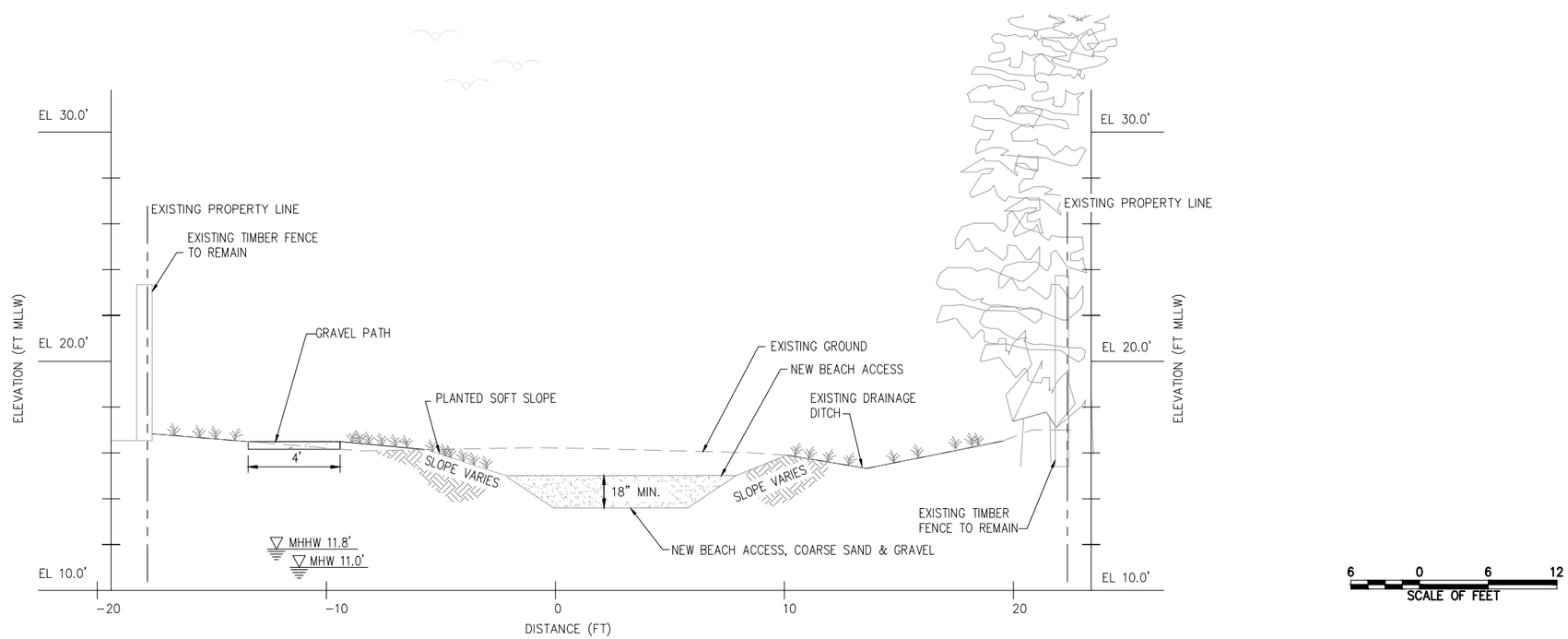

SECTION F – STN 0+50'

6 0 6 12
SCALE OF FEET

CITY OF BAINBRIDGE ISLAND
280 Madison Avenue North
Bainbridge Island, WA
206-842-2016

PUBLIC WORKS ENGINEERING DEPARTMENT

PROJECT INFORMATION

FLETCHER LANDING ROAD END IMPROVEMENTS

REVISION BLOCK

NO.	DATE	BY	REVISION

S20, T 25N, R2E, W.M.

Scale:
Horiz: 1"= 12'
Vert: NONE
Coordinate System: WASHINGTON STATE PLANE, NORTH NAD83/91 (HARN)
Vertical Datum: MLLW
Designed By: KJB
Drawn By: MRM\KJB
Inspected By: ?_____
W.O. No.: ?_____
Issue Date: __-__-__

SHEET TITLE

SECTION TRANSECTS E & F

Drawing No.
C-008

Sheet No. 10 Of 16

Constructed By:
Date:
Recorded Survey: Kitsap County Auditor AF_____ Vol/Bk_____ Page
Control Monument:
Field Bk/Pg:
Surveyed By:
Date:
Section: __-S-__T_N-R_E
Drawn By: MRM\KJB
Checked By: WJG
Filename: Fletcher rev 11_4
XREF Filename:

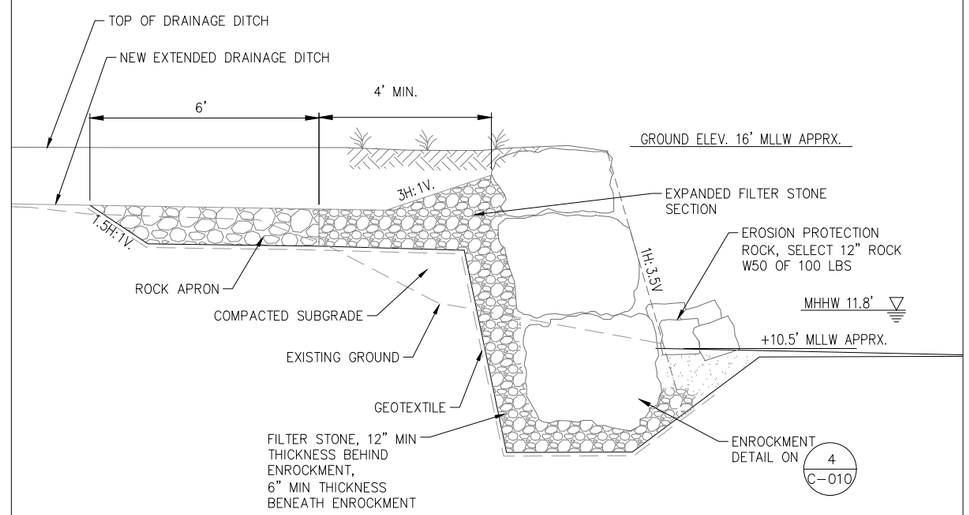

1. DRAINAGE DETAIL : PROFILE

VERTICAL DATUM:

THE VERTICAL DATUM FOR THIS SURVEY IS MEAN LOWER LOW WATER (MLLW), BASED ON ELEVATIONS FROM THE RECORD OF SURVEY.
CONVERSION EQUATION: MLLW = NAVD88 + 2.51

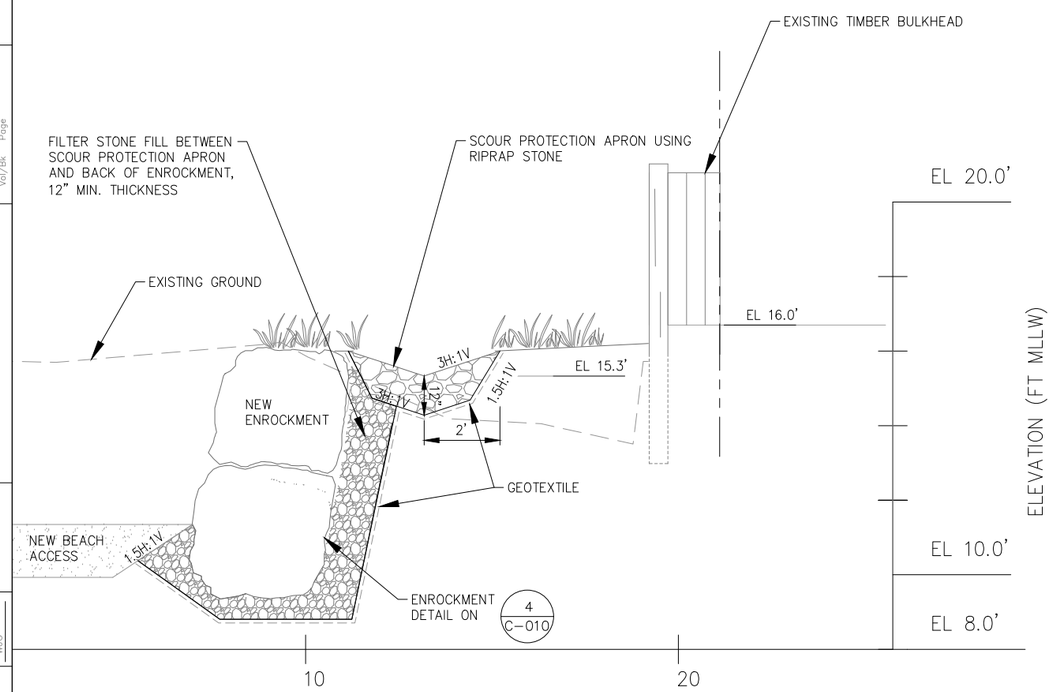

2. DETAIL CROSS SECTION

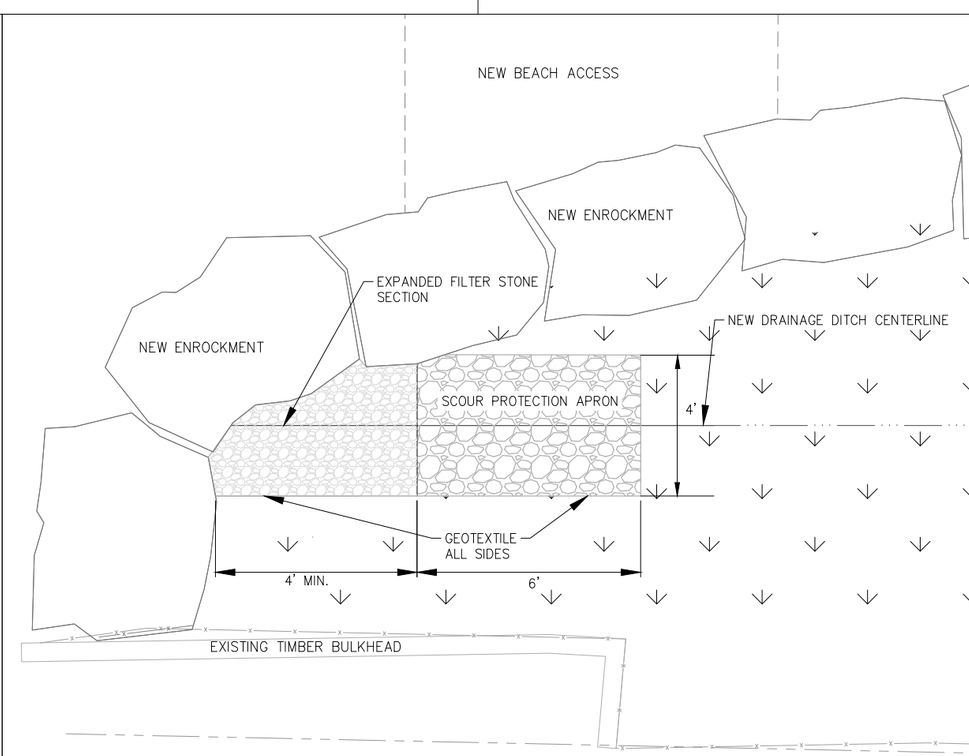

3. DRAINAGE DETAIL : PLAN

CITY OF BAINBRIDGE ISLAND
280 Madison Avenue North
Bainbridge Island, WA
206-842-2016

PUBLIC WORKS ENGINEERING DEPARTMENT

PROJECT INFORMATION

FLETCHER LANDING ROAD END IMPROVEMENTS

REVISION BLOCK

NO.	DATE	BY	REVISION

S20, T 25N, R2E, W.M.

Scale:
Horiz: 1"= 4'
Vert: NONE
Coordinate System: WASHINGTON STATE PLANE, NORTH NAD83/91 (HARN)
Vertical Datum: MLLW
Designed By: KJB
Drawn By: MRM\KJB
Inspected By: ?_____
W.O. No.: ?_____
Issue Date: __-__-__

SHEET TITLE

DRAINAGE DETAILS

Drawing No. C-009

Sheet No. 11 Of 16

Constructed By: Date:
Recorded Survey: Kitsap County Auditor AF- Vol/Bk Page
Control Monument: Field Bk/Pg:
Surveyed By: Date:
Section: S T N R E
Drawn By: MRM\KJB Checked By: WJG
Filename: Fletcher rev 11_4
XREF Filename:

VERTICAL DATUM:

THE VERTICAL DATUM FOR THIS SURVEY IS MEAN LOWER LOW WATER (MLLW), BASED ON ELEVATIONS FROM THE RECORD OF SURVEY.
CONVERSION EQUATION: MLLW = NAVD88 + 2.51

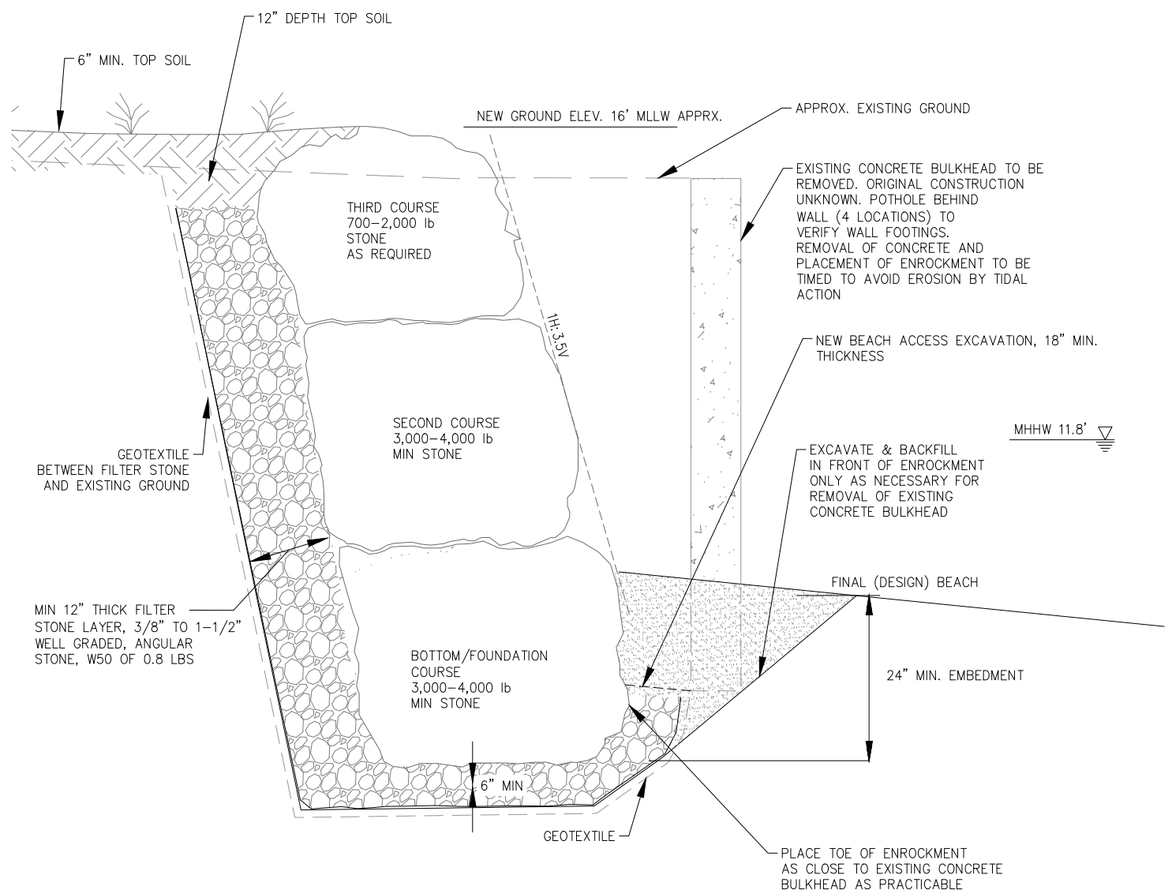

4. ENROCKMENT DETAIL
MAXIMUM ENROCKMENT HEIGHT AT FINAL/DESIGN BEACH ACCESS GRADE

1 0 1 2
SCALE OF FEET

CITY OF BAINBRIDGE ISLAND
280 Madison Avenue North
Bainbridge Island, WA
206–842–2016

PUBLIC WORKS ENGINEERING DEPARTMENT

PROJECT INFORMATION

FLETCHER LANDING ROAD END IMPROVEMENTS

REVISION BLOCK

NO.	DATE	BY	REVISION

S20, T 25N, R2E, W.M.

Scale:
Horiz: 1"= 2'
Vert: NONE
Coordinate System: WASHINGTON STATE PLANE, NORTH NAD83/91 (HARN)
Vertical Datum: MLLW
Designed By: KJB
Drawn By: MRM\KJB
Inspected By: ?_____
W.O. No.: ?____
Issue Date: __-__-__

SHEET TITLE

ENROCKMENT DETAIL

Drawing No.
C–010

Sheet No. 12 Of 16

Constructed By: Date:
Recorded Survey Kitsap County Auditor AF– Vol/Bk Page
Control Monument: Field Bk/Pg:
Surveyed By: Date:
Section: __–S–__T_N–R_E
Drawn By: MRM\KJB Checked By: WJG
Filename: Fletcher rev 11_4
XREF Filename:

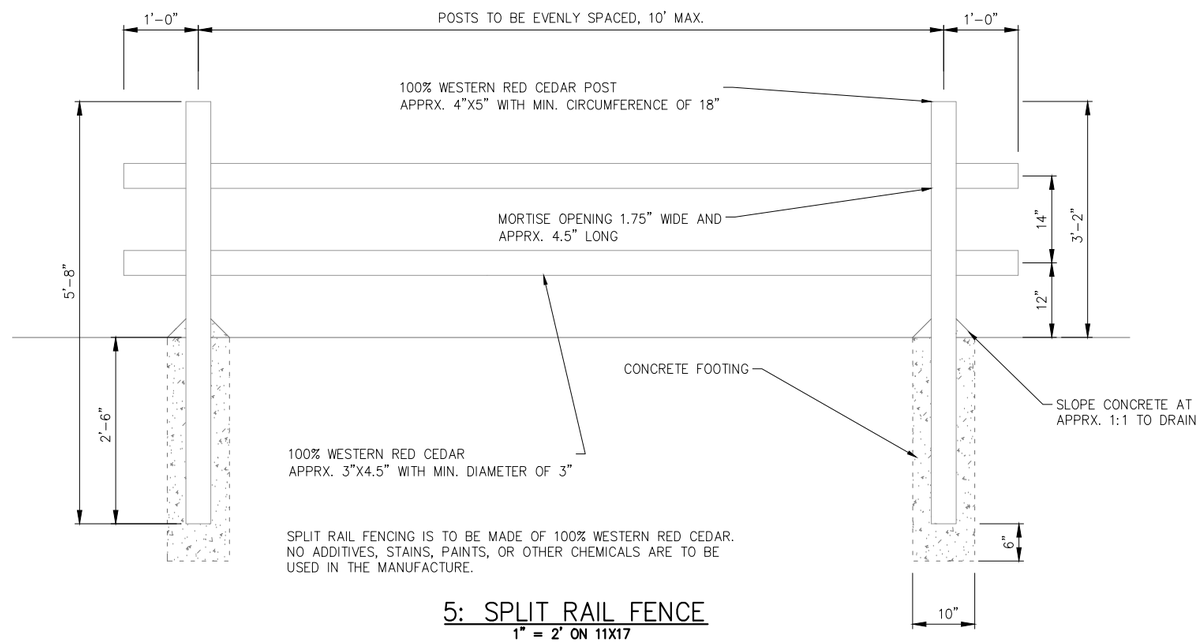

5: SPLIT RAIL FENCE

1" = 2' ON 11X17

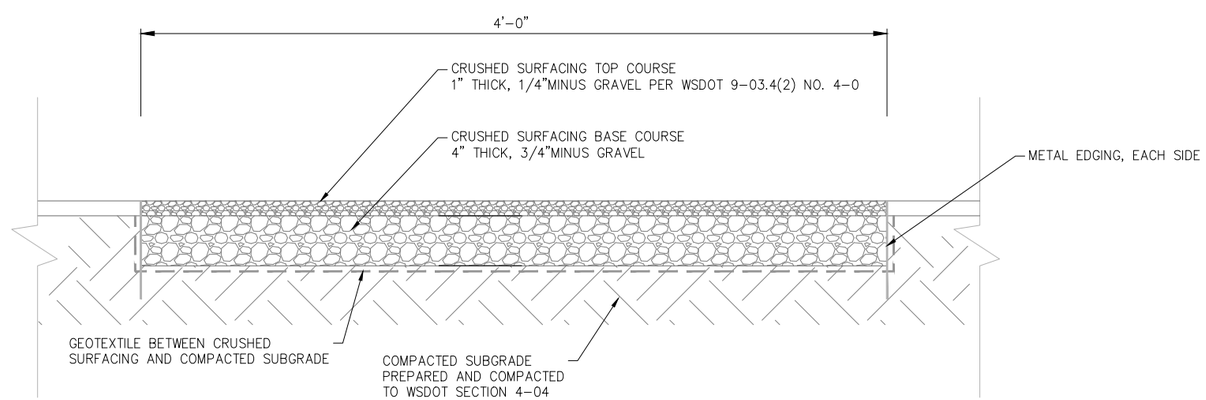

6: CRUSHED SURFACING GRAVEL PATH

1" = 1' ON 11X17

Constructed By:
Date:

Recorded Survey
Kitsap County Auditor
AF# ____
Vol/Bk Page

Control Monument:
Field Bk/Pg:

Surveyed By:
Date:

Section: __S-__T_N-R_E

Drawn By: MRM\KJB
Checked By: WJG

Filename: Fletcher rev 11_4
XREF Filename:

CITY OF BAINBRIDGE ISLAND

280 Madison Avenue North
Bainbridge Island, WA
206-842-2016

PUBLIC WORKS ENGINEERING DEPARTMENT

PROJECT INFORMATION

FLETCHER LANDING ROAD
END IMPROVEMENTS

REVISION BLOCK

NO.	DATE	BY	REVISION

S20, T 25N, R2E, W.M.

Scale:
Horiz: 1"= VARIES
Vert: NONE

Coordinate System:
WASHINGTON STATE PLANE, NORTH NAD83/91 (HARN)

Vertical Datum:
MLLW

Designed By:
KJB

Drawn By:
MRM\KJB

Inspected By:
?_____

W.O. No.:
?_____

Issue Date:
__-__-__

SHEET TITLE

SPLIT RAIL FENCE
AND GRAVEL
PATHWAY DETAILS

Drawing No.
C-011

Sheet No. 13 Of 16

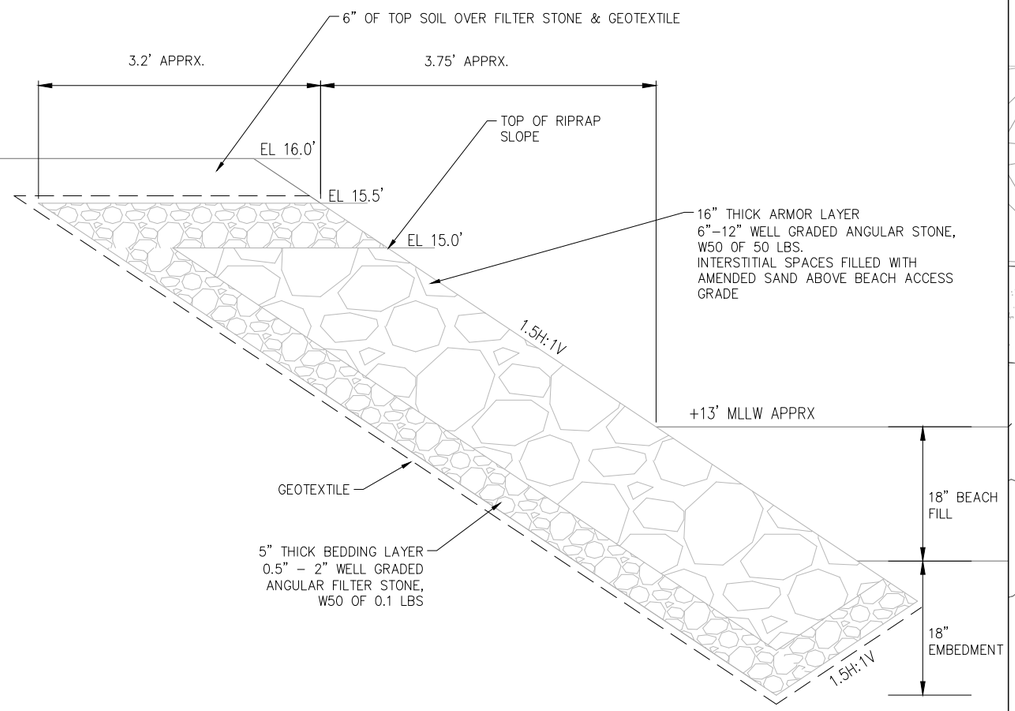

7. RIPRAP SECTION AT 13' BEACH CONTOUR, NORTH REVETMENT

1" = 2' ON 11X17

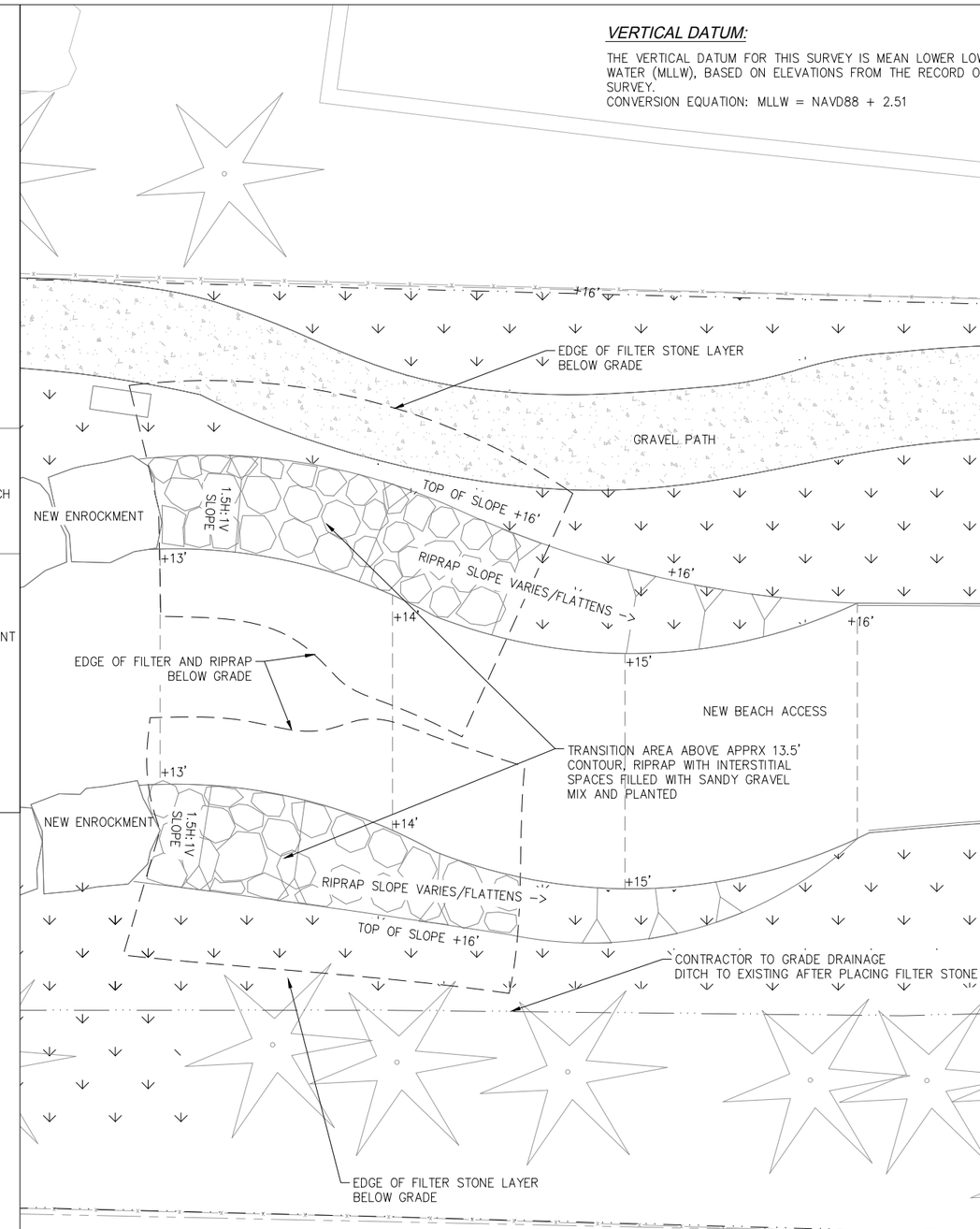

8. RIPRAP SLOPE AREA – PLAN VIEW

1" = 6' ON 11X17

VERTICAL DATUM:

THE VERTICAL DATUM FOR THIS SURVEY IS MEAN LOWER LOW WATER (MLLW), BASED ON ELEVATIONS FROM THE RECORD OF SURVEY.
CONVERSION EQUATION: MLLW = NAVD88 + 2.51

CITY OF BAINBRIDGE ISLAND
280 Madison Avenue North
Bainbridge Island, WA
206–842–2016

PUBLIC WORKS ENGINEERING DEPARTMENT

PROJECT INFORMATION

FLETCHER LANDING ROAD END IMPROVEMENTS

REVISION BLOCK

NO.	DATE	BY	REVISION

S20, T 25N, R2E, W.M.

Scale:
Horiz: 1"= VARIES
Vert: NONE
Coordinate System: WASHINGTON STATE PLANE, NORTH NAD83/91 (HARN)
Vertical Datum: MLLW
Designed By: KJB
Drawn By: MRM\KJB
Inspected By: ?_____
W.O. No.: ?_____
Issue Date: __-__-__

SHEET TITLE

RIPRAP DETAILS

Drawing No.
C–012

Sheet No. 14 Of 16

Constructed By:
Date:
Recorded Survey
Kitsap County Auditor
AF_____ Vol/Bk_____ Page
Control Monument:
Field Bk/Pg:
Surveyed By:
Date:
Section: __-S-__T_N-R_E
Drawn By: KJB
Checked By: WJG
Filename: Fletcher rev 11_4
XREF Filename:

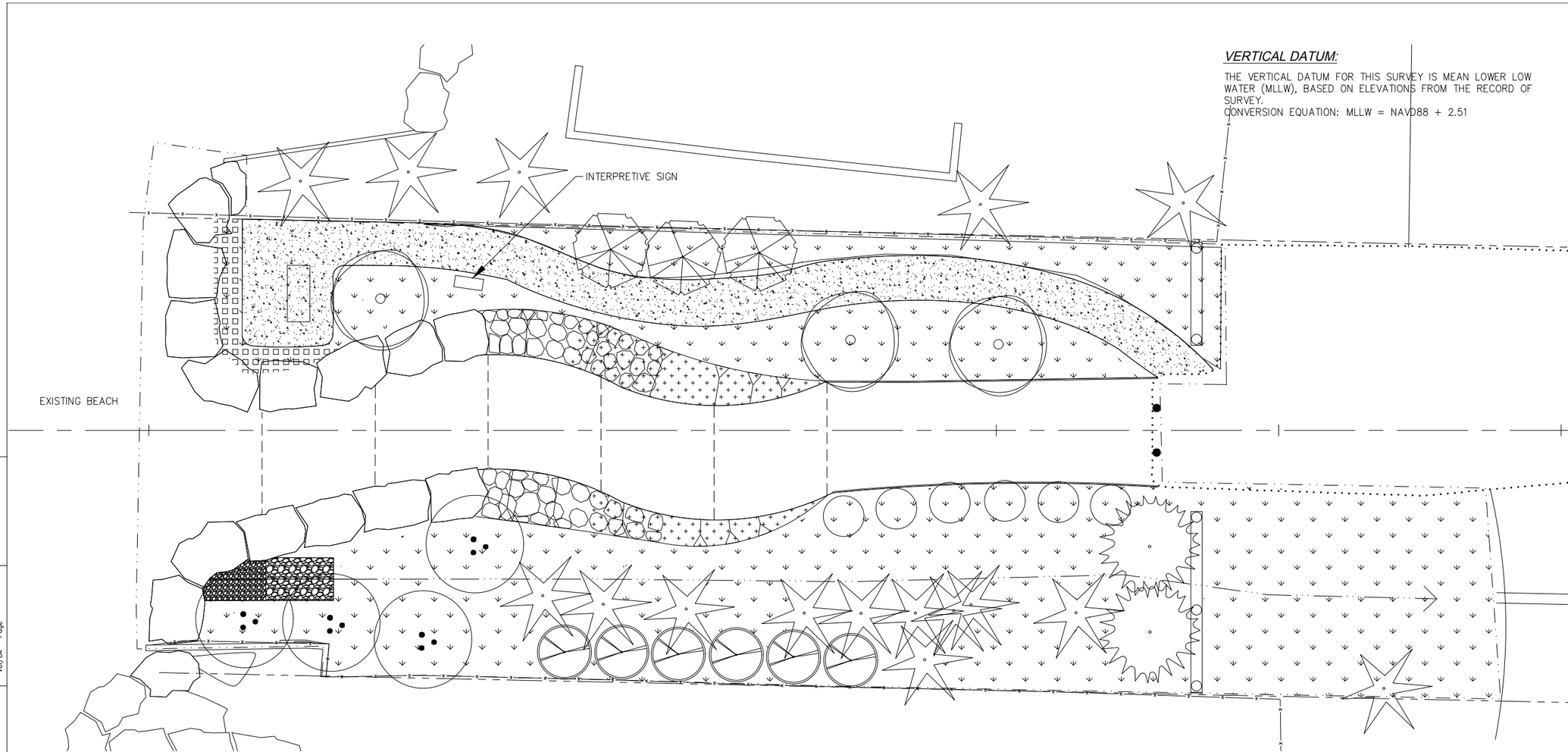

VERTICAL DATUM:

THE VERTICAL DATUM FOR THIS SURVEY IS MEAN LOWER LOW WATER (MLLW), BASED ON ELEVATIONS FROM THE RECORD OF SURVEY.
CONVERSION EQUATION: MLLW = NAVD88 + 2.51

SCIENTIFIC NAME	COMMON NAME	QTY	SIZE	SPACING	NOTES
ACER CIRCINATUM	VINE MAPLE	4	5' B&B	8'-10' O.C.	MULT-STEM (3) MIN.
PRUNUS EMARGINATA	BITTER CHERRY	3	#7 CONT.	AS SHOWN	TREE FORM
POTENTILLA FRUTICOSA	SHRUBBY CINQUEFOIL	6	#2 CONT.	AS SHOWN	
RHODODENDRON OCCIDENTALE	WESTERN AZALEA	3	#2 CONT.	6' O.C.	
SYMPHORICARPOS ALBUS	SNOWBERRY	3	#2 CONT.	6' O.C.	
ROSA GYMNOCARPA	BALD HIP ROSE	6	#2 CONT.	6' O.C.	
POLYSTICHUM MUNITUM	SWORD FERN	225	#2 CONT.	3' O.C.	
DESCHAMPSIA CESPITOSA	TUFTED HAIRGRASS	24	#1 CONT.	1.5' O.C.	
ARMERIA MARITIMA	SEA PINK	15	4" BAND	1' O.C.	INTERSPERSE SPECIES
SEDUM SPATHULIFOLIUM	BROAD-LEAVED STONECROP	15	4" BAND	1' O.C.	WITHIN PLANT BED
EXISTING TREE					

PLANTING NOTES

1. ALL LANDSCAPE AREAS (EXCLUDING RIPRAP AND DRAINAGE SWALES) TO RECEIVE 6" DEPTH MIN. OF TOPSOIL TYPE A. TOPSOIL TYPE A TO BE PACIFIC 3-WAY TOPSOIL, OR EQUAL.
2. ALL LANDSCAPE AREAS EXCLUDING RIPRAP AND DRAINAGE SWALES) TO RECEIVE 6" DEPTH MIN. OF ARBORIST WOOD CHIP MULCH.
3. CONTRACTOR SHALL WATER PLANTS IMMEDIATELY FOLLOWING INSTALLATION AND SHALL FURNISH WATER TO MAINTAIN HEALTHY PLANT GROWTH UNTIL PHYSICAL COMPLETION AND ACCEPTANCE OF THE PROJECT.

5 0 5 10
SCALE OF FEET

CITY OF BAINBRIDGE ISLAND
280 Madison Avenue North
Bainbridge Island, WA
206-842-2016

PUBLIC WORKS ENGINEERING DEPARTMENT

PROJECT INFORMATION

FLETCHER LANDING ROAD END IMPROVEMENTS

REVISION BLOCK

NO.	DATE	BY	REVISION

S20, T 25N, R2E, W.M.

Scale:
Horiz: 1"=10'
Vert: NONE
Coordinate System:
WASHINGTON STATE PLANE, NORTH NAD83/91 (HARN)
Vertical Datum:
MLLW
Designed By:
ME
Drawn By:
MRM\KJB
Inspected By:
?
W.O. No.:
WJG
Issue Date:

SHEET TITLE

PLANTING PLAN

Drawing No.
L-001

Sheet No. 15 Of 16

Constructed By:
Date:
Recorded Survey
Kitsap County Auditor
AF- _____
Vol/Bk Page
Control Monument:
Field Bk/Pg:
Surveyed By:
Date:
Section: ___S-___T-N-R-E
Drawn By: ME
Checked By: WJG
Filename: Fletcher_landscape plan
XREF Filename:

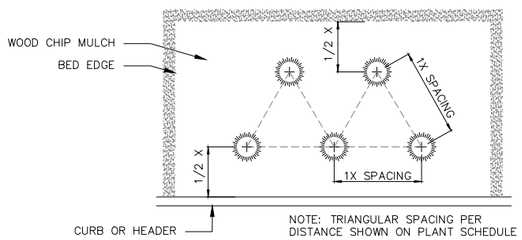

7 GROUNDCOVER SPACING
SCALE: NTS

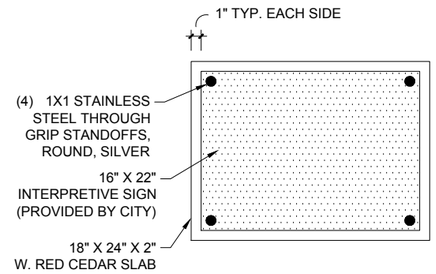

4 SIGN PANEL DETAIL
SCALE: NTS

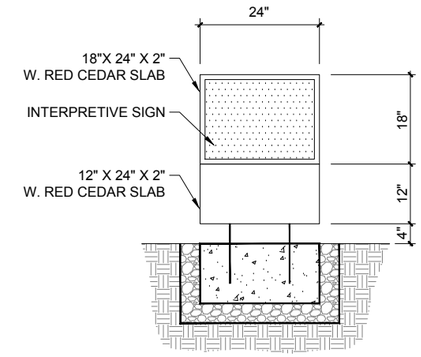

1 SIGN – FRONT ELEVATION
SCALE: NTS

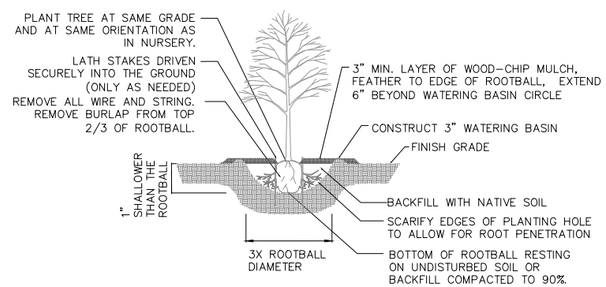

5 DECIDUOUS TREE PLANTING
SCALE:

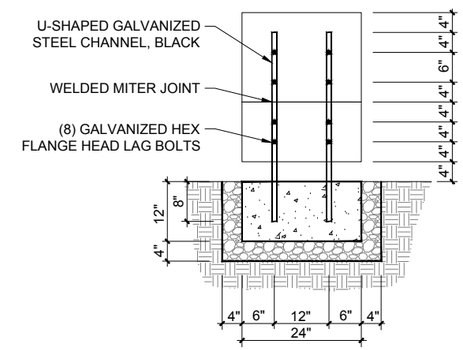

2 SIGN – REAR ELEVATION
SCALE: NTS

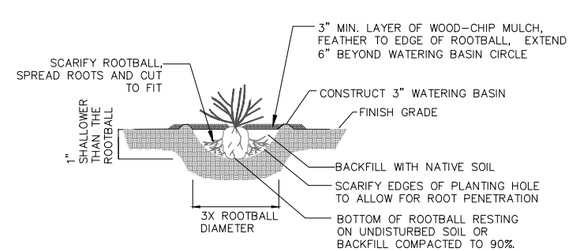

6 SHRUB PLANTING
SCALE:

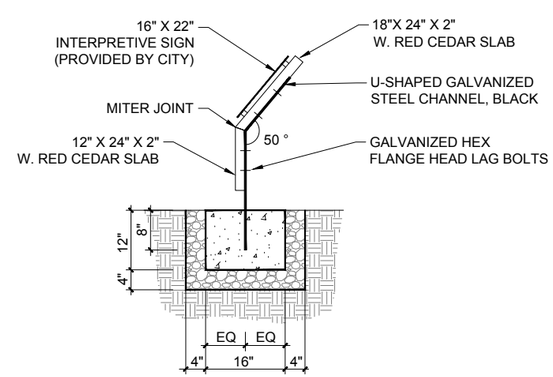

3 SIGN – SIDE ELEVATION
SCALE: NTS

CITY OF BAINBRIDGE ISLAND
280 Madison Avenue North
Bainbridge Island, WA
206-842-2016

PUBLIC WORKS ENGINEERING DEPARTMENT

PROJECT INFORMATION

FLETCHER LANDING ROAD END IMPROVEMENTS

REVISION BLOCK

NO.	DATE	BY	REVISION

S20, T 25N, R2E, W.M.

Scale:
Horiz: NONE
Vert: NONE
Coordinate System:
WASHINGTON STATE PLANE, NORTH NAD83/91 (HARN)
Vertical Datum:
MLLW
Designed By:
ME
Drawn By:
ME
Inspected By:
?
W.O. No.:
WJG
Issue Date:

SHEET TITLE

LANDSCAPE DETAILS

Drawing No.
L-002

Sheet No. 16 Of 16

Constructed By:
Date:
Recorded Survey
Kitsap County Auditor
AF-
VARIES
Vol/Bk Page
Control Monument:
Field Bk/Pg:
Surveyed By:
Date:
Section:
S T N R E
Drawn By:
ME
Checked By:
WJG
Filename:
Fletcher_landscape plan
XREF Filename: