Eagle Harbor Waterfront Park

Bid Set
11/20/2015

PROJECT TEAM

OWNER:
City of Bainbridge Island
280 Madison Avenue North
Bainbridge Island, WA 98110
Ph. 206-780-3721
Contact: Mark Epstein
E-mail: mepstein@bainbridgewa.gov

LANDSCAPE ARCHITECT:
Walker Macy
105 S. Main Street, Suite 205
Seattle, WA 98104
Ph. 206-582-3874
Contact: Chris Jones
E-mail: cjones@walkermacy.com

CIVIL:
Browne Wheeler Engineers
241 Ericksen Avenue NE
Bainbridge Island, WA 98110
Ph. 206-842-0605
Contact: Kelsey Laughlin
E-mail:
kelsey@brownewheeler.com

ARCHITECT:
Patano Studio Architecture
603 Stewart St. Suite 207
Seattle, WA 98101
Ph. 206-734-3870
Contact: Christopher Patano
E-mail: christopher@patanostudio.com

STRUCTURAL:
Lund Opsahl
1201 First Avenue South, Suite 310
Seattle, WA 98134
Ph. 206-402-5156
Contact: Adam Slivers
E-mail: ASlivers@LundOpsahl.com

ELECTRICAL / LIGHTING:
PAE Consulting Engineers / Luma Lighting Design
1501 East Madison Street, Suite 300
Seattle, WA 98122
Ph. 206-596-8606
Contact: Shaun Darragh
E-mail: shaund@lumald.com

PROJECT SUMMARY

SITE ADDRESS: 301 SHANNON DR SE

PROJECT DESCRIPTION: Eagle Harbor Waterfront Park

GOVERNING AGENCY: City of Bainbridge Island
280 Madison Avenue North
Bainbridge Island, WA 98110
Ph. 206-842-7633
Web: www.ci.bainbridge-isl.wa.us

VICINITY MAP

NTS

SHEET INDEX

CIVIL
- ***C1*** *TESC PLAN & DETAILS*
- ***C2*** *UTILITY PLAN*
- ***C3*** *GENERAL NOTES AND DRAINAGE PROFILES*
- ***C4*** *UTILITY DETAILS*

SITE / LANDSCAPE
- ***L101*** *DEMOLITION AND TREE PROTECTION PLAN*
- ***L201*** *MATERIALS PLAN*
- ***L301*** *LAYOUT PLAN*
- ***L401*** *GRADING PLAN*
- ***L402*** *GRADING PLAN ENLARGEMENT*
- ***L500*** *PLANTING SCHEDULE*
- ***L501*** *PLANTING PLAN*
- ***L600*** *SITE DETAILS*
- ***L601*** *SITE DETAILS*
- ***L602*** *SITE DETAILS*
- ***L603*** *SITE DETAILS*
- ***L604*** *STORMWATER DETAILS*
- ***L605*** *SITE FURNISHING DETAILS*
- ***L606*** *BENCH DETAILS*
- ***L607*** *PLANTING DETAILS*

ARCHITECTURAL
- ***A0.0*** *SCHEDULES, ABBREV., SYMBOLS, NOTES*
- ***A2.0*** *FLOOR PLAN*
- ***A2.1*** *ROOF PLAN*
- ***A2.2*** *ADD ALT. ROOF PLAN*
- ***A3.0*** *ELEVATIONS*
- ***A3.1*** *ELEVATIONS*
- ***A4.0*** *SECTIONS*
- ***A4.1*** *SECTIONS*

LIGHTING & ELECTRICAL
- ***E0*** *SYMBOLS, LEGENDS, ABBREVIATIONS*
- ***E1*** *SITE PLAN - ELECTRICAL*
- ***E2*** *PANEL SCHEDULES & CALCULATIONS*
- ***E3*** *PANEL SCHEDULES & CALCULATIONS*

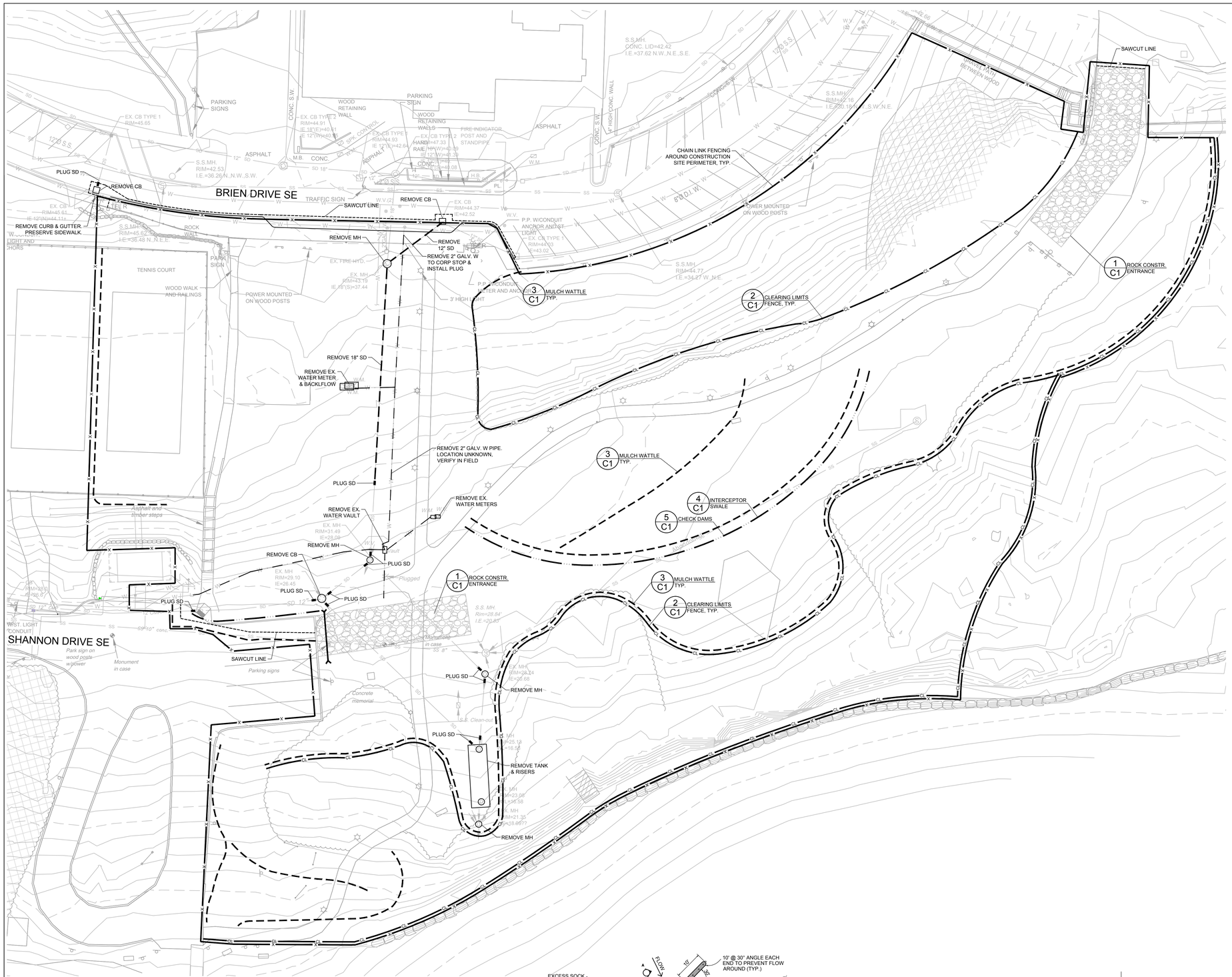

TESC PLAN

SCALE: 1" = 20'

0 5 10 20 40

TOPOGRAPHIC INFORMATION BASED ON SITE SURVEY PROVIDED BY COBI DATED APRIL 20, 2006.
SITE PLAN FROM WALKER MACY DATED 11/12/2015.

DATUM: CITY OF BAINBRIDGE ISLAND VERTICAL CONTROL NETWORK (NAVD 88)

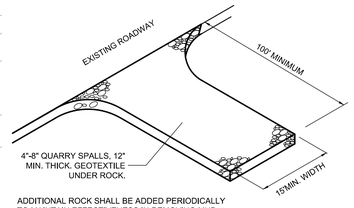

ADDITIONAL ROCK SHALL BE ADDED PERIODICALLY TO MAINTAIN EFFECTIVENESS IN REMOVING MUD FROM TIRES.

SLOPE ENTRANCE TO DISPERSE RUNOFF.

ENTRANCE LENGTH MAY BE REDUCED TO MAXIMUM PRACTICABLE SIZE BASED ON SITE CONDITIONS.

1 / C1 ROCK CONSTRUCTION ENTRANCE

NO SCALE

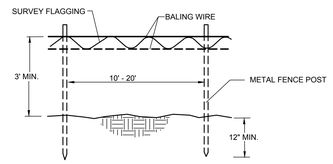

2 / C1 CLEARING LIMITS FENCE

NO SCALE

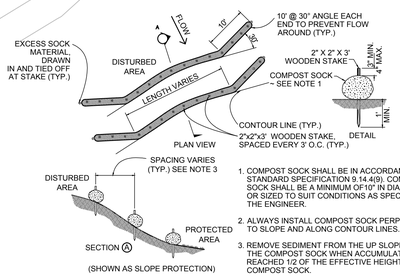

1. COMPOST SOCK SHALL BE IN ACCORDANCE WITH STANDARD SPECIFICATION 9.14.4(9). COMPOST SOCK SHALL BE A MINIMUM OF10" IN DIAMETER OR SIZED TO SUIT CONDITIONS AS SPECIFIED BY THE ENGINEER.
2. ALWAYS INSTALL COMPOST SOCK PERPENDICULAR TO SLOPE AND ALONG CONTOUR LINES.
3. REMOVE SEDIMENT FROM THE UP SLOPE SIDE OF THE COMPOST SOCK WHEN ACCUMULATION HAS REACHED 1/2 OF THE EFFECTIVE HEIGHT OF THE COMPOST SOCK.
4. MAY BE USED IN PLACE OF FILTER FENCE FOR PERMITER CONTROL.

3 / C1 MULCH WATTLE

NO SCALE

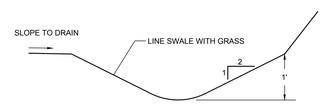

4 / C1 INTERCEPTOR SWALE

NO SCALE

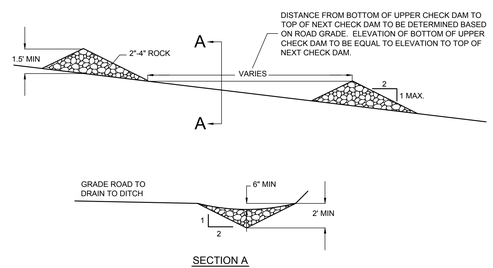

5 / C1 CHECK DAM

NO SCALE

CITY OF BAINBRIDGE ISLAND
280 MADISON AVE. NORTH
BAINBRIDGE ISLAND, WA 98110

WALKER | MACY

BROWNE • WHEELER ENGINEERS, INC
241 ERICKSEN AVENUE NE
BAINBRIDGE ISLAND, WA 98110
P 206.842.8405 INFO@BrowneWheeler.COM

EAGLE HARBOR WATERFRONT PARK

BAINBRIDGE ISLAND, WA

11-20-2015

PROJECT NUMBER: WA16-01 P3119.01
DRAWN BY: K. LAUGHLIN
REVIEWED BY: A. WHEELER
PHASE: **BID SET**
ISSUE DATE: 11-20-2015
REVISIONS:

TESC PLAN & DETAILS

C1

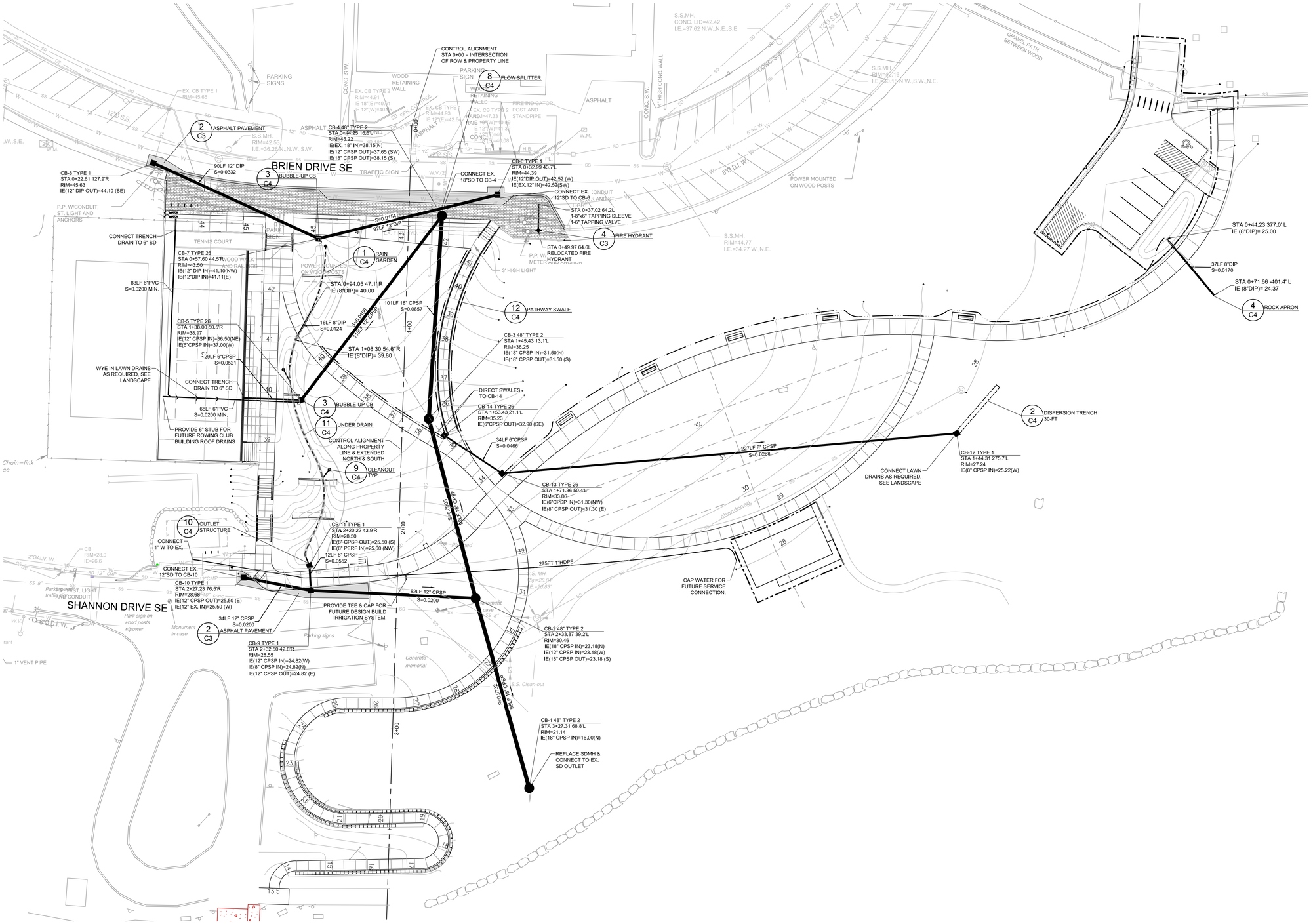

SITE PLAN

SCALE: 1" = 20'

0 5 10 20 40

TOPOGRAPHIC INFORMATION BASED ON SITE SURVEY PROVIDED BY COBI DATED APRIL 20, 2006.
SITE PLAN FROM WALKER MACY DATED 11/12/2015.

DATUM: CITY OF BAINBRIDGE ISLAND VERTICAL CONTROL NETWORK (NAVD 88)

CITY OF BAINBRIDGE ISLAND
280 MADISON AVE. NORTH
BAINBRIDGE ISLAND, WA 98110

WALKER | MACY

BROWNE • WHEELER ENGINEERS, INC
241 ERICKSEN AVENUE NE
BAINBRIDGE ISLAND, WA 98110
P 206.842.9605 INFO@BrowneWheeler.COM

EAGLE HARBOR WATERFRONT PARK

BAINBRIDGE ISLAND, WA

11-20-2015

PROJECT NUMBER: WA16-01	P3119.01
DRAWN BY: K. LAUGHLIN	REVIEWED BY: A. WHEELER

PHASE:
BID SET

ISSUE DATE:
11-20-2015

REVISIONS:

UTILITY PLAN

C2

GENERAL NOTES

1. UNLESS OTHERWISE SPECIFIED, MATERIALS AND WORKMANSHIP SHALL BE IN ACCORDANCE WITH THE REQUIREMENTS OF THE CURRENTLY ADOPTED EDITION OF "STANDARD SPECIFICATIONS FOR ROAD, BRIDGE AND MUNICIPAL CONSTRUCTION", APWA/WSDOT EXCEPT AS MODIFIED BY THE CITY OF BAINBRIDGE ISLAND IN THE CURRENT EDITION OF "DESIGN AND CONSTRUCTION STANDARDS AND SPECIFICATIONS"

2. THE LOCATIONS OF EXISTING UNDERGROUND UTILITIES AND OTHER FEATURES ON THE PLAN ARE APPROXIMATE AND MAY NOT BE COMPLETE. ACTUAL LOCATIONS SHALL BE FIELD VERIFIED BY THE CONTRACTOR AS REQUIRED.

3. CONTRACTOR SHALL BE SOLELY RESPONSIBLE FOR WORKER SAFETY. ALL TRENCHING AND OTHER ACTIVITIES SHALL BE IN ACCORDANCE WITH STATE AND LOCAL SAFETY REGULATIONS AND REQUIREMENTS.

4. A COPY OF THE APPROVED PLANS AND OTHER APPLICABLE SPECIFICATIONS AND DRAWINGS SHALL BE ONSITE DURING CONSTRUCTION.

5. CONTRACTOR SHALL OBTAIN AN UNDERGROUND UTILITIES LOCATE PRIOR TO BEGINNING CONSTRUCTION (UNDERGROUND UTILITIES LOCATION SERVICE, 1-800-424-5555).

6. CONTRACTOR SHALL INSTALL, REPLACE OR RELOCATE ALL SIGNS AND OTHER FEATURES AFFECTED BY CONSTRUCTION.

7. CONTRACTOR SHALL SCHEDULE AND ATTEND A PRE-CONSTRUCTION CONFERENCE WITH CITY STAFF PRIOR TO ANY WORK ON CITY RIGHTS-OF-WAY.

8. ANY REVISIONS TO THE PLANS SHALL BE REVIEWED AND APPROVED BY THE BAINBRIDGE ISLAND ENGINEERING DEPARTMENT PRIOR TO IMPLEMENTATION IN THE FIELD.

9. SIGNING, FLAGGING AND TRAFFIC CONTROL SHALL BE IN ACCORDANCE WITH THE CURRENT EDITION OF THE WSDOT TRAFFIC MANUAL AND THE MANUAL OF UNIFORM TRAFFIC CONTROL DEVICES. THE PLAN SHALL BE PROVIDED TO THE CITY FOR APPROVAL IF APPLICABLE.

10. ALL PIPE AND OTHER MATERIAL STORED ALONG CITY RIGHT-OF-WAY MUST BE PLACED AT A SAFE DISTANCE FROM THE TRAVELED ROADWAY IN SUCH A MANNER AS TO AVOID FALLING ONTO THE ROADWAY.

11. MAXIMUM LENGTH OF OPEN TRENCH SHALL BE 400 FEET. AT THE END OF EACH DAY, ALL TRENCHES MUST BE BACKFILLED OR COVERED WITH STEEL PLATES OR BARRICADED WITH FLASHING WARNING LIGHTS.

12. ALL PIPE TRENCH BACKFILL SHALL BE IN ACCORDANCE WITH THE WSDOT/APWA SPECIFICATIONS FOR PIPE BEDDING AND BANK RUN GRAVEL IF PROPER COMPACTION CANNOT BE OBTAINED USING NATIVE SOIL, EXCEPT AS NOTED ON PLAN.

13. POWER, TELEVISION CABLE, AND COMMUNICATIONS LINES SHALL BE INSTALLED WITH A MINIMUM OF FIVE FEET HORIZONTAL SEPARATION FROM PUBLIC WATER, SEWER AND STORM DRAINAGE FACILITIES.

14. REROUTE WATER LINES AS REQUIRED TO MAINTAIN PIPE COVERAGE AND CLEARANCES FROM OTHER UTILITIES.

EROSION CONTROL NOTES

1. THE CONTRACTOR SHALL APPLY ALL MEASURES NECESSARY TO PREVENT THE DISCHARGE OF SEDIMENT-LADEN WATER OFF THE PROJECT SITE. FACILITIES SHOWN ON THE PLANS ARE THE MINIMUM REQUIREMENTS FOR ANTICIPATED SITE CONDITIONS.

2. THE CONTRACTOR SHALL INSPECT AND MAINTAIN ALL EROSION CONTROL FACILITIES REGULARLY, PARTICULARLY DURING AND FOLLOWING LARGE STORMS.

3. ALL STREETS ADJACENT TO THIS PROJECT SHALL BE KEPT CLEAN OF ALL MATERIAL DEPOSITS RESULTING FROM CONSTRUCTION.

4. SITE WORK SHALL BE SCHEDULED TO MINIMIZE THE EXPOSURE OF DISTURBED SOILS. ALL EXPOSED AND UNWORKED SOILS, INCLUDING SOIL STOCKPILES, SHALL BE STABILIZED BY SUITABLE APPLICATION OF BMPS THAT PROTECT SOIL FROM THE EROSIVE FORCES OF RAINDROP IMPACT AND FLOWING WATER. APPLICABLE PRACTICES INCLUDE, BUT ARE NOT LIMITED TO VEGETATIVE ESTABLISHMENT, MULCHING, PLASTIC COVERING, AND THE EARLY APPLICATION OF GRAVEL BASE ON AREAS TO BE PAVED. FROM OCTOBER 1 THROUGH APRIL 30, NO SOILS SHALL REMAIN EXPOSED FOR MORE THAN 2 DAYS. FROM MAY 1 THROUGH SEPTEMBER 30, NO SOILS SHALL REMAIN EXPOSED FOR MORE THAN 7 DAYS.

5. CARE SHALL BE TAKEN TO PREVENT ANY DISCHARGE OF SEDIMENT-LADEN WATER INTO THE STORMWATER DISPERSION SYSTEMS. ANY INLETS WHICH RECEIVE RUNOFF SHOULD BE PROTECTED WITH SEDIMENT FILTERS.

6. PETROLEUM PRODUCTS AND OTHER POTENTIAL POLLUTANTS SHALL BE PROTECTED TO PREVENT THEIR INTRODUCTION INTO SITE RUNOFF OR THE STORM DRAINAGE SYSTEM.

7. DEWATERING WATER SHALL BE FILTERED TO REMOVE SEDIMENT AND DISCHARGED IN A MANNER TO AVOID DOWNSTREAM IMPACTS.

8. CLEARING LIMITS, IF SHOWN, SHALL BE CLEARLY FLAGGED PRIOR TO ANY CLEARING OR CONSTRUCTION ON THE SITE. DURING CONSTRUCTION, NO DISTURBANCE BEYOND THE FLAGGED CLEARING LIMITS SHALL BE PERMITTED. THE FLAGGING SHALL BE MAINTAINED BY THE CONTRACTOR UNTIL ALL CONSTRUCTION IS APPROVED.

9. ALL TEMPORARY EROSION CONTROL FACILITIES, INCLUDING PERIMETER CONTROLS, SHALL REMAIN IN PLACE UNTIL FINAL SITE CONSTRUCTION IS COMPLETE AND APPROVAL HAS BEEN RECEIVED FROM THE CITY.

STORM DRAINAGE

1. STORM DRAINS SHALL BE SMOOTH INTERIOR CORRUGATED POLYETHYLENE (ADS N12 OR EQUIVALENT) OR PVC (ASTM D3034, SDR 35) UNLESS OTHERWISE NOTED.

2. ALL STORM DRAINS SHOULD BE LAID AT A MINIMUM SLOPE OF 2% (1/4 INCH PER FOOT) UNLESS OTHERWISE NOTED. CARE SHALL BE TAKEN TO MAINTAIN MINIMUM SLOPE.

3. PRIOR TO FINAL INSPECTION AND ACCEPTANCE OF STORM DRAINAGE WORK, PIPES AND STORM DRAIN STRUCTURES SHALL BE CLEANED AND FLUSHED. ANY OBSTRUCTIONS WITHIN THE STORM DRAIN SYSTEM SHALL BE REMOVED AND WASH WATER OF ANY SORT SHALL NOT BE DISCHARGED TO THE STORM DRAIN SYSTEM OR SURFACE WATERS.

4. ALL MANHOLES AND CATCH BASINS SHALL BE ADJUSTED TO FINAL GRADE PRIOR TO FINAL PAVING OR LANDSCAPING.

5. CURTAIN AND FOOTING DRAINS SHALL BE CONNECTED TO STORM DRAIN SYSTEM AT A CATCH BASIN.

6. CONTRACTOR SHALL PLUG EXISTING STORM DRAIN LINES WHERE ENCOUNTERED.

7. TRENCHING WITHIN THE DRIPLINE OF EXISTING TREES SHALL BE DONE BY HAND METHODS ONLY.

APPROXIMATE GRADING VOLUMES

CUT VOLUME: 250 CUBIC YARDS
FILL VOLUME: 2,350 CUBIC YARDS
VOLUMES DO NOT INCLUDE:

- CUT & FILL FOR SOIL AMENDMENT OR PAVEMENT MATERIALS
- CUT & FILL FOR UTILITY TRENCHES OR RAIN GARDENS

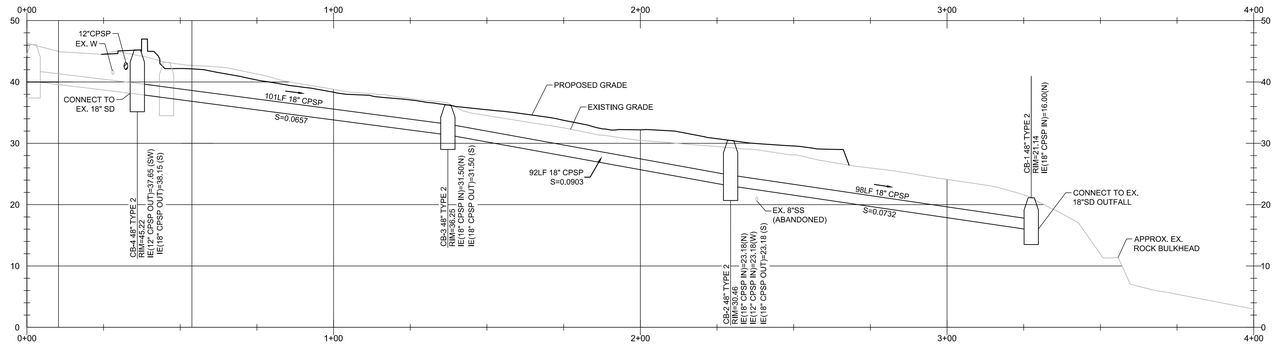

SD PROFILE - CB-1 TO CB-4
SCALE: 1" = 20' H
1" = 10' V

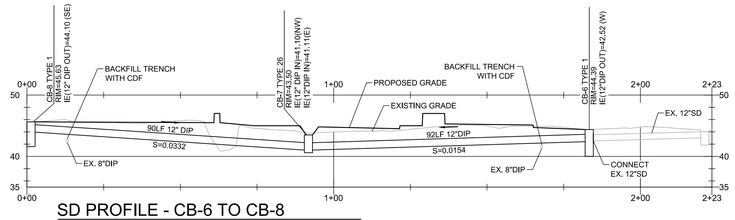

SD PROFILE - CB-6 TO CB-8
SCALE: 1" = 20' H
1" = 10' V

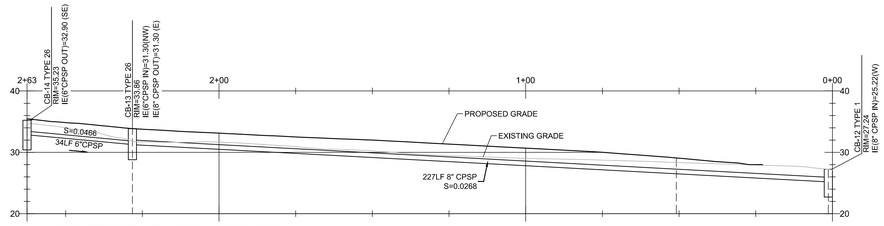

SD PROFILE - CB-12 TO CB-14
SCALE: 1" = 20' H
1" = 10' V

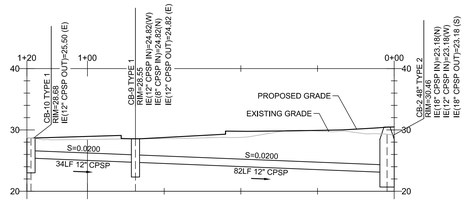

SD PROFILE - CB-2 TO CB-10
SCALE: 1" = 20' H
1" = 10' V

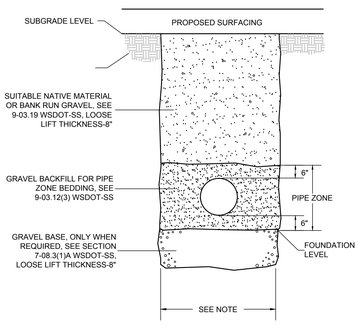

SANITARY SEWER/STORM DRAIN TRENCH

BACKFILL AND FOUNDATION MATERIAL COMPACTION REQUIREMENTS

		W	SS/SD	SS/SD/W
	SURFACE	ALL	PAVEMENT	LANDSCAPING
DEPTH	<2'	95%	95%	90%
	>2'	95%	90%	90%

1 / C3 UTILITY TRENCH BACKFILL
NO SCALE

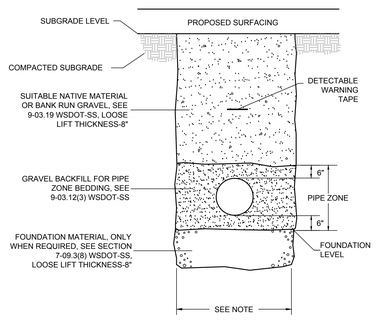

WATER TRENCH

NOTES:

TRENCH WIDTH IN PIPE ZONE:
MAX. WIDTH=I.D. + 30" FOR PIPE 15" DIA. OR SMALLER
MAX. WIDTH=1.5 x I.D. + 18" FOR PIPE 18" DIA. OR LARGER

TYPICAL VERTICAL PIPE SEPARATION OF SIX INCHES; IF LESS PROVIDE CDF BACKFILL BETWEEN PIPES.

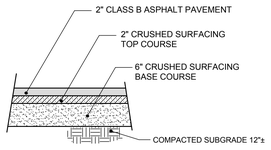

ALL MATERIALS SHALL BE COMPACTED TO 95% MAX. DENSITY (MODIFIED PROCTOR)

REMOVE AND REPLACE UNSUITABLE MATERIAL AS DIRECTED BY GEOTECHNICAL ENGINEER.

2 / C3 ASPHALT PAVEMENT
NO SCALE

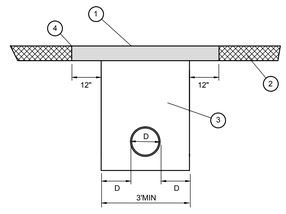

1. LONGITUDINAL TRENCH. REMOVE AND REPLACE EXISTING PAVEMENT (2" MIN THICKNESS) FULL WIDTH OF DISTURBED LANE.

   TRANSVERSE TRENCH. REMOVE AND REPLACE EXISTING PAVEMENT (2" MIN THICKNESS) SEE ABOVE FOR WIDTH.

   ASPHALT SHALL BE CLASS B COMPACTED IN 2" MAXIMUM LIFTS.

2. EXISTING PAVEMENT

3. 95% COMPACTION TO 8' DEPTH, 90% BELOW, SEE UTILITY TRENCH BACKFILL DETAIL FOR MATERIAL SPECIFICATION.

4. STRAIGHT SAW CUT FULL DEPTH, CLEAN, HEAT & TACK EDGES WITH SEALER & SEAL WITH ASPHALT CEMENT

TEMPORARY RESTORATION OF TRENCHES FOR OVERNIGHT USE SHALL BE ACCOMPLISHED BY USING COLD MIX, ATB OR STEEL PLATES. PATCH SHALL BE MACHINE ROLLED FLUSH WITH EXISTING PAVEMENT AND SHALL BE PLACED PER SECTION 5-04 OF THE WSDOT/APWA SPECIFICATIONS.

3 / C3 R.O.W. UTILITY TRENCH RESTORATION
NO SCALE

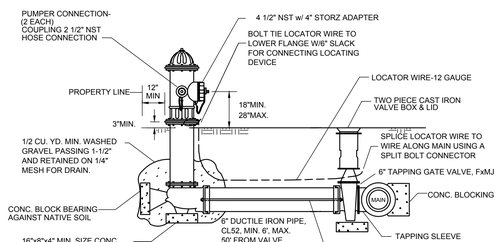

5 1/4" MAIN VALVE OPENING FIRE HYDRANT
6" MECHANICAL JOINT INLET, 1 1/2" PENTAGON OPERATING NUT. FIRE HYDRANT TO BE PAINTED TWO COATS OF RUSTOLEUM.
HYDRANTS SHALL BE CLOW-MEDALIAN, M&H 929 OR MUELLER.

MAINTAIN UNOBSTRUCTED LEVEL GROUND SURFACE FOR A MINIMUM RADIUS OF 3' AROUND HYDRANT.

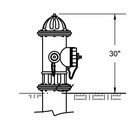

NOTE: IF CONC. IS NOT SPECIFIED, BACKFILL TO BE COMPLETED IN 6" LAYERS

4 / C3 FIRE HYDRANT
NO SCALE

CITY OF BAINBRIDGE ISLAND
280 MADISON AVE. NORTH
BAINBRIDGE ISLAND, WA 98110

WALKER | MACY

BROWNE • WHEELER ENGINEERS, INC
241 ERICKSEN AVENUE NE
BAINBRIDGE ISLAND, WA 98110
P.206.842.6605 INFO@BrowneWheeler.COM

EAGLE HARBOR WATERFRONT PARK

BAINBRIDGE ISLAND, WA

11-20-2015

PROJECT NUMBER: WA16-01 P3119.01
DRAWN BY: K. LAUGHLIN
REVIEWED BY: A. WHEELER
PHASE: **BID SET**
ISSUE DATE: 11-20-2015
REVISIONS:

GENERAL NOTES & DRAINAGE PROFILES

C3

RAIN GARDEN NOTES

CONSTRUCTION

1. MINIMIZE COMPACTION OF THE BASE AND SIDEWALLS OF THE BIORETENTION AREA.

2. EXCAVATION IS NOT ALLOWED DURING WET OR SATURATED CONDITIONS. EXCAVATION SHOULD BE PERFORMED BY MACHINERY OPERATION ADJACENT TO THE BIORETENTION FACILITY AND NO HEAVY EQUIPMENT WITH NARROW TRACKS, NARROW TIRES, OR LARGE LUGGED, HIGH PRESSURE TIRES SHOULD BE USED ON THE BOTTOM OF THE BIORETENTION FILTRATION FACILITY. IF MACHINERY MUST OPERATE IN THE BIORETENTION CELL FOR EXCAVATION, USE LIGHT WEIGHT, LOW GROUND-CONTACT PRESSURE EQUIPMENT AND RIP THE BASE AT COMPLETION TO REFRACTURE SOIL TO A MINIMUM OF 12 INCHES.

3. THE SIDEWALLS AND BOTTOM SHOULD BE ROUGHENED WHERE SCRAPED AND SEALED BY EXCAVATION EQUIPMENT. THE BOTTOM OF THE FACILITY SHOULD BE FLAT.

4. THE BIORETENTION SOIL MIXTURE SHOULD BE PLACED AND GRADED BY EXCAVATORS AND/OR BACKHOES OPERATING ADJACENT TO THE BIORETENTION FACILITY. IF MACHINERY MUST OPERATE IN THE BIORETENTION CELL FOR SOIL PLACEMENT OR SOIL GRADING, USE LIGHT WEIGHT, LOW GROUND-CONTACT PRESSURE EQUIPMENT. THE SOIL MIXTURE SHOULD BE PLACED IN HORIZONTAL LAYERS NOT TO EXCEED 6 INCHES PER LIFT FOR THE ENTIRE AREA OF THE BIORETENTION FACILITY.

5. SEE LANDSCAPE PLAN FOR PLANTING PLAN.

ENGINEERED SOIL MIX

SOIL MIX:
APPROXIMATELY 3 PARTS AGGREGATE AND 2 PARTS COMPOST BY VOLUME, TO MEET THE SPECIFICATIONS LISTED BELOW:

AGGREGATE GRADATION

SIEVE SIZE	PERCENT PASSING
3/8-INCH	100
US NO. 4	95-100
US NO. 10	75-90
US NO. 40	25-40
US NO. 100	4-10
US NO. 200	2-5

COEFFICIENT OF UNIFORMITY >6
COEFFICIENT OF CURVE 1<X<3

COMPOST GRADATION PER TMECC 02.02-B

SIEVE SIZE	PERCENT PASSING
1-INCH	100
5/8-INCH	90-100
1/4-INCH	75-100

1. pH 5.5-8
2. INERT MATERIAL <1% BY WEIGHT PER TMECC 03.08-A
3. ORGANIC CONTENT 45%<X<65% PER TMECC 05.07-A
4. SOLUBLE SALT <6.0 MMHOS/CM PER TMECC 04.10-A
5. MATURITY >80% PER TMECC 05.05-A
6. STABILITY <7 PER TMECC 05.08-B
7. COMPOST SHALL CONSIST OF AT LEAST 65% TYPE I FEEDSTOCKS AND LESS THAN 35% TYPE III FEED STOCKS PER WAC173-350-100. VENDOR MUST BE CERTIFIED BY THE US COMPOSTING COUNCIL STA PROGRAM.
8. CARBON TO NITROGEN < 25:1 PER TMECC 04.01

1. MINIMUM INITIAL SOIL MIX HYDRAULIC CONDUCTIVITY =6.0<x<12.0 INCH/HOUR, ASTM D2434 - STANDARD TEST FOR PERMEABILITY OF GRANULAR SOILS. TESTED AT 85% COMPACTION, PER ASTM D 1557 - STANDARD TEST METHODS FOR LABORATORY COMPACTION CHARACTERISTICS OF SOIL USING MODIFIED EFFORT.

2. THE SOIL MIXTURE SHOULD BE UNIFORM, FREE OF STONES, STUMPS, ROOTS OR SIMILAR OBJECTS LARGER THAN 1 INCH.

3. ON-SITE SOIL MIXING OR PLACEMENT NOT ALLOWED IF SOIL IS SATURATED OR SUBJECT TO WATER WITHIN 48 HOURS.

4. COVER AND STORE SOIL ACCORDINGLY TO PREVENT WETTING OR SATURATION.

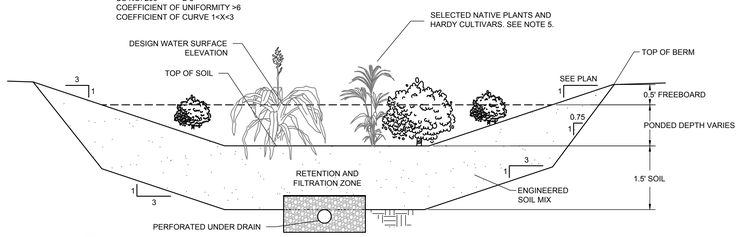

1 / C4 RAIN GARDEN
NO SCALE

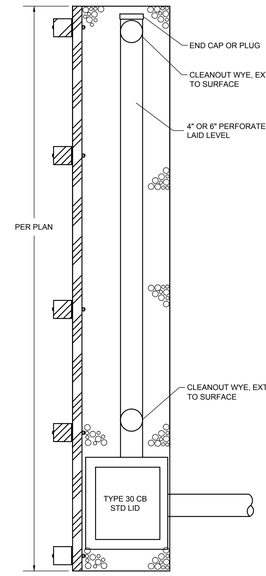

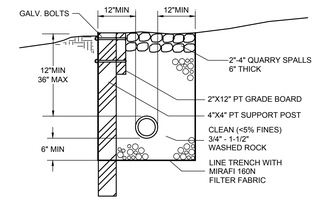

SECTION-DISPERSAL TRENCH

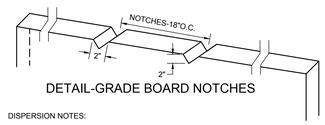

DETAIL-GRADE BOARD NOTCHES

DISPERSION NOTES:

CONSTRUCT TRENCH TO DISPERSE FLOW ACROSS ENTIRE LENGTH.

TRENCH AND GRADE BOARD MUST BE LEVEL. ALIGN TO FOLLOW CONTOURS.

SUPPORT POST SPACING AS REQUIRED BY SOIL CONDITIONS TO ENSURE STURDY SUPPORT OF GRADE BOARD.

LOCATION OF DISPERSION TRENCH MAY BE ADJUSTED IN FIELD. MINIMUM DISTANCES LISTED MUST BE MAINTAINED:
- MINIMUM 5-FT FROM STRUCTURES OR PROPERTY LINE.
- MINIMUM 50-FT HORIZONTAL DISTANCE FROM PRIVATE WELL.
- MINIMUM 30-FT UP GRADIENT OF OSS FIELDS AND TANKS.
- MINIMUM 10-FT SIDE OR DOWN GRADIENT OF OSS FIELDS AND TANKS.

DISPERSION AREA SHOWN ON THE PLANS SHALL BE PROTECTED FROM DISTURBANCE DURING CONSTRUCTION. IF THIS AREA IS DISTURBED, THE SOIL SHALL BE AMENDED IN ACCORDANCE WITH THE SOIL AMENDMENT NOTES. REMOVAL OF TREES IS ALLOWED IF THE ROOT BALL IS UNDISTURBED. ANY PLANT MATERIAL REMOVED SHALL BE REPLACED WITH NATIVE VEGETATION.

2 / C4 DISPERSION TRENCH
NO SCALE

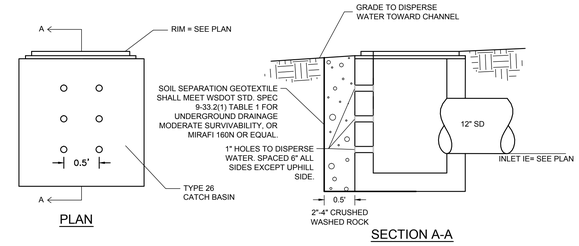

3 / C4 BUBBLE-UP CB
NO SCALE

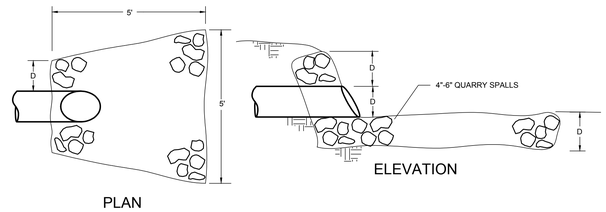

4 / C4 ROCK APRON
NO SCALE

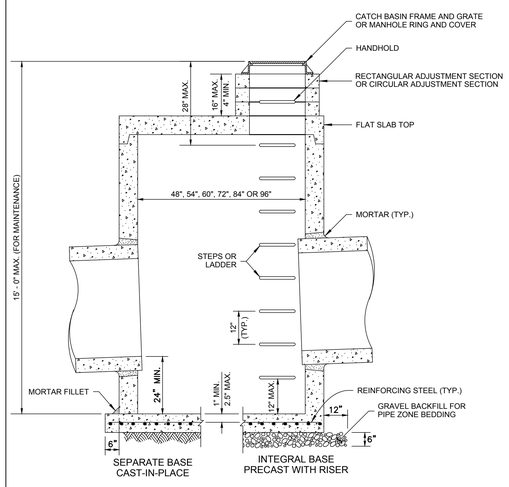

CATCH BASIN DIMENSIONS						
CATCH BASIN DIAMETER	WALL THICKNESS	BASE THICKNESS	MAXIMUM KNOCKOUT SIZE	MINIMUM DISTANCE BETWEEN KNOCKOUTS	BASE REINFORCING STEEL $in^2/ft.$ IN EACH DIRECTION	
					SEPARATE BASE	INTEGRAL BASE
48"	4"	6"	36"	8"	0.23	0.15
54"	4.5"	8"	42"	8"	0.19	0.19

NOTES

1. NO STEPS ARE REQUIRED WHEN HEIGHT IS 4' OR LESS.

2. THE BOTTOM OF THE PRECAST CATCH BASIN MAY BE SLOPED TO FACILITATE CLEANING.

3. THE RECTANGULAR FRAME AND GRATE MAY BE INSTALLED WITH THE FLANGE UP OR DOWN. THE FRAME MAY BE CAST INTO THE ADJUSTMENT SECTION.

4. KNOCKOUTS SHALL HAVE A WALL THICKNESS OF 2" MINIMUM TO 2.5" MAXIMUM. PROVIDE A 1.5" MINIMUM GAP BETWEEN THE KNOCKOUT WALL AND THE OUTSIDE OF THE PIPE. AFTER THE PIPE IS INSTALLED, FILL THE GAP WITH JOINT MORTAR IN ACCORDANCE WITH STANDARD SPECIFICATION 9-04.3.

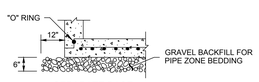

SEPARATE BASE PRECAST

5 / C4 CB - TYPE 2
NO SCALE

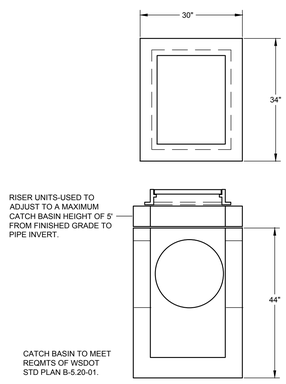

6 / C4 CB- TYPE 1
NO SCALE

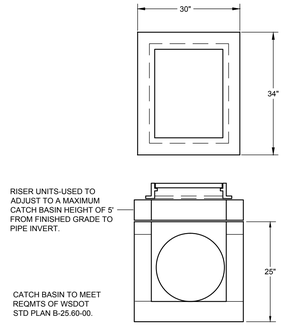

7 / C4 CB - TYPE 26
NO SCALE

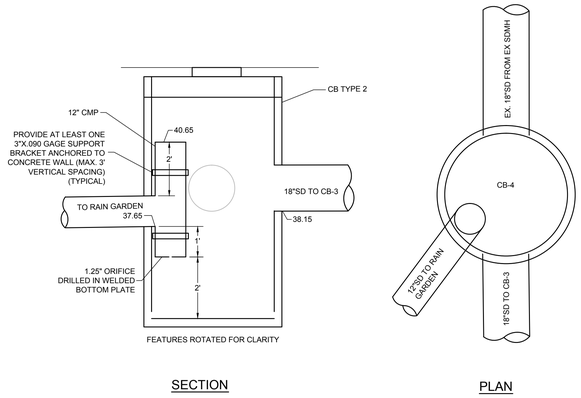

8 / C4 FLOW SPLITTER
NO SCALE

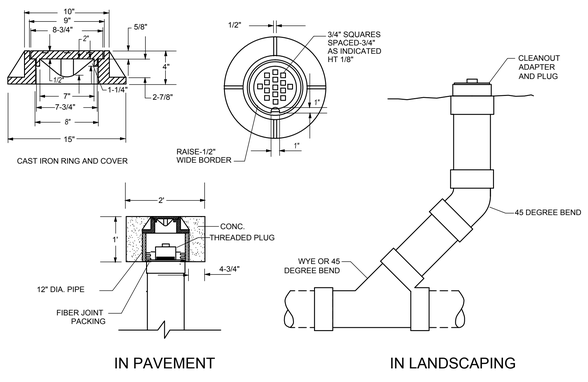

9 / C4 CLEANOUT
NO SCALE

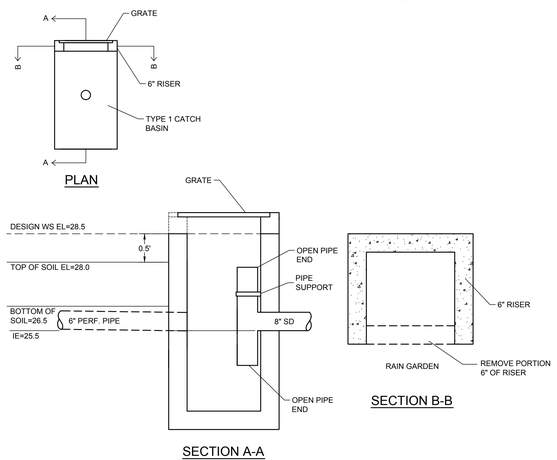

10 / C4 OUTLET STRUCTURE
NO SCALE

GRAVEL FILTER+	
U.S. STD. SIEVE	% PASSING
1 1/2"	100
1"	95-100
1/2"	25-60
#4	0-10
#8	0-5

+ GRAVEL FILTER SHOULD BE 3/8" TO 3/4" UNIFORMLY GRADED STONE WITH A WASH LOSS OF NO MORE THEN 0.5% (AASHTO SIZE #57).

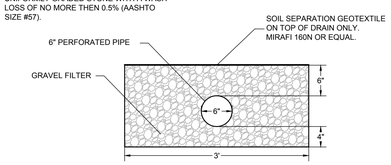

11 / C4 UNDER DRAIN
NO SCALE

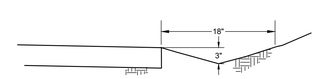

12 / C4 PATHWAY SWALE
NO SCALE

CITY OF BAINBRIDGE ISLAND
280 MADISON AVE. NORTH
BAINBRIDGE ISLAND, WA 98110

WALKER | MACY

BROWNE • WHEELER ENGINEERS, INC
241 ERICKSEN AVENUE NE
BAINBRIDGE ISLAND, WA 98110
P.206.842.0605 INFO@BrowneWheeler.COM

EAGLE HARBOR WATERFRONT PARK

BAINBRIDGE ISLAND, WA

11-20-2015

PROJECT NUMBER: WA16-01 P3119.01
DRAWN BY: K. LAUGHLIN
REVIEWED BY: A. WHEELER
PHASE: **BID SET**
ISSUE DATE: 11-20-2015
REVISIONS:

UTILITY DETAILS

C4

KEY NOTES

1. REMOVE ROCK WALL
2. REMOVE MANHOLE, SEE CIVIL
3. REMOVE PARK SIGN
4. REMOVE AND RELOCATE POWER SERVICE, SEE SHEET L201
5. RELOCATE EXISTING FIRE HYDRANT, SEE SHEET L201
6. REMOVE ALL EXISTING LIGHTS, POLES & FOOTINGS, TYP.
7. REMOVE STAGE AND FOUNDATION, DISPOSE OF AT AN APPROVED OFF-SITE LOCATION
8. REMOVE BASKETBALL HOOP AND BOLLARDS
9. REMOVE EXISTING VAULT AND BACKFLOW DEVICE PER APPLICABLE CODES
10. PRESERVE AND PROTECT PARKING SIGNS
11. PRESERVE AND PROTECT P.P. AND ANCHOR
12. REMOVE METER AND VALVE, SEE CIVIL
13. REMOVE CATCH BASIN, SEE CIVIL
14. PRESERVE AND PROTECT EXISTING MONUMENT
15. REMOVE ASPHALT APRON
16. REMOVE 8" CONCRETE PIPE
17. REMOVE TANK, SEE CIVIL
18. PRESERVE AND PROTECT EXISTING POWER POLE AND PEDESTAL
19. REMOVE EXISTING BIKE RACKS
20. REMOVE STEEL GUARDRAIL AND WOOD FENCE
21. REMOVE STAIRS AND HANDRAILS
22. CONTRACTOR TO REMOVE 224 LF OF CHAINLINK FENCE, INCLUDING FOOTINGS AND APPURTENANCES. RESET POSTS AND/OR MEND FENCING IN ORDER TO PROVIDE A SECURE CHAINLINK ENCLOSURE TO THE ADJACENT ROWING CLUB
23. REMOVE AND REINSTALL PARKING SIGN

GENERAL NOTES

1. CONTRACTOR TO NOTIFY OWNER'S REPRESENTATIVE OF ANY DISCREPANCIES BETWEEN THE PLANS AND THE EXISTING CONDITIONS BEFORE STARTING WORK.
2. ALL WORK SHALL BE PERFORMED IN STRICT ACCORDANCE WITH THE TEMPORARY TREE AND PLANT PROTECTION SPECIFICATIONS FOR THE PROJECT.
3. ALL ITEMS TO BE REMOVED SHALL BE DISPOSED OFF-SITE AT A COMMERCIALLY LICENSED DISPOSAL FACILITY.
4. CONIFER TREES WITHIN LOW, SHALL BE LIMBED UP TO 30' FROM EXISTING GRADE. DECIDUOUS TREES SHALL BE LIMBED UP 8' ABOVE EXISTING GRADE AND CROWNS THINNED FOR HEALTH AND INCREASED LIGHT PENETRATION. ALL TREE TRIMMING AND REMOVAL SHALL BE PERFORMED BY A LICENSED ARBORIST AND UNDER SUPERVISION OF LANDSCAPE ARCHITECT.
5. CONTRACTOR SHALL REMOVE ONLY NON-NATIVES WITHIN CLEARING AND GRUBBING AREAS UNDER THE SUPERVISION OF LANDSCAPE ARCHITECT.
6. PRESERVE AND PROTECT EXISTING PICNIC TABLES. STORE AT AN APPROVED LOCATION AND RELOCATE PER LANDSCAPE ARCHITECT'S DIRECTION.
7. REMOVE ALL TRASH RECEPTACLES AND PROVIDE TO THE OWNER.
8. TREES FELLED WITHIN THE 150' SHORELINE ZONE SHALL BE CUT INTO 20' FOOT SECTIONS AND SITED WITHIN THE 150' SHORELINE ZONE AS DIRECTED BY THE LANDSCAPE ARCHITECT. LIMBS AND BRANCHES OF THESE TREES SHALL BE CHIPPED AND PLACED WITHIN THE 150' ZONE, AS DIRECTED BY THE ARCHITECT.
9. CONTRACTOR TO USE EXTREME CARE WHEN WORKING WITHIN DRIP LINES OF EXISTING TREES, LIMITING DISTURBANCE TO ROOTS.

LEGEND

- LIMIT OF DEMOLITION WORK
- REMOVE EXISTING CURB, RAILING, AND FENCE, INCLUDING ANY ASSOCIATED FOOTINGS AND BASE MATERIAL
- PAVING SAWCUT LINE
- STRIP LAWN TO 6", CLEAR AND GRUB VEGETATION
- SELECTIVE CLEARING AND GRUBBING, STRIP LAWN SELECTIVELY, LIMB UP TREES AS DIRECTED BY ARCHITECT. CLEARING AND GRUBBING WITHIN THIS AREA SHALL BE DONE BY HAND METHODS ONLY, SEE NOTE 4 AND 5
- REMOVE EXISTING ASPHALT, CONCRETE, RAILINGS, STAIRS, R.R. TIES, AND PEA GRAVEL – FULL DEPTH
- REMOVE EXISTING STAMPED CONCRETE – FULL DEPTH
- REMOVE EXISTING TENNIS COURT PAVING, BASE MATERIAL, FENCING AND ASSOCIATED APPURTENANCES
- TREE PROTECTION FENCE SEE DETAIL X/LXXX
- PROTECT EXISTING TREE TO REMAIN
- REMOVE EXISTING TREE
- REMOVE EXISTING TREE STUMP

0 5 10 20 40
SCALE: 1" = 20'-0"
NORTH

CITY OF BAINBRIDGE ISLAND
280 MADISON AVE. NORTH
BAINBRIDGE ISLAND, WA 98110

WALKER | MACY

STATE OF WASHINGTON REGISTERED LANDSCAPE ARCHITECT
CHRISTOPHER S. JONES
CERTIFICATE NO. 1371

EAGLE HARBOR WATERFRONT PARK

BAINBRIDGE ISLAND, WA

PROJECT NUMBER:	P3119.01
DRAWN BY: KH	REVIEWED BY: CJ/DO
PHASE:	BID SET
ISSUE DATE:	11/20/2015
REVISIONS:	

DEMOLITION AND TREE PROTECTION PLAN

L101

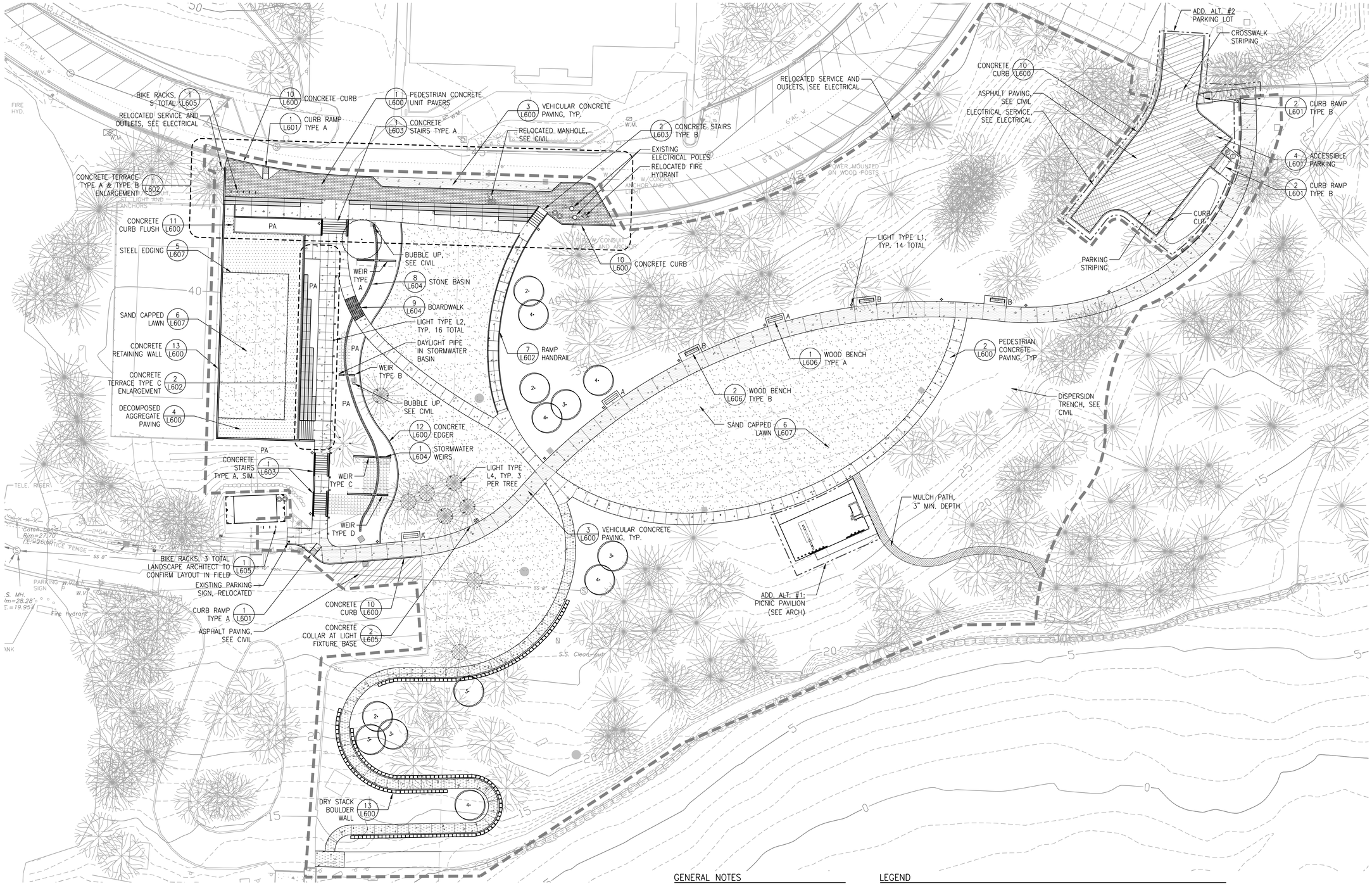

GENERAL NOTES

1. CONTRACTOR TO NOTIFY OWNER'S REPRESENTATIVE OF ANY DISCREPANCIES BETWEEN THE PLANS AND THE EXISTING CONDITIONS BEFORE STARTING WORK.
2. WORK OCCURRING WITHIN DRIP LINE OF EXISTING TREES SHALL BE DONE BY HAND METHODS ONLY.

LEGEND

- LIMIT OF WORK
- ADD. ALT. LIMIT OF WORK
- UNIT PAVERS
- CONCRETE PAVING – PEDESTRIAN
- CONCRETE PAVING – PERVIOUS
- CONCRETE PAVING – VEHICULAR
- ASPHALT PAVING – VEHICULAR
- DECOMPOSED AGGREGATE PAVING
- DETECTABLE WARNING
- LAWN AREA
- JUTE NETTING, SEE 7 L607
- PA — PLANTING AREA
- CONCRETE WALL
- 4"ø PERF DRAINLINES
- CATCH BASIN, SEE CIVIL
- MANHOLE, SEE CIVIL
- DRY STACK BOULDER WALL
- TRENCH DRAIN
- STEEL EDGER
- A B — BENCH
- LIGHT POLE
- RELOCATED FIRE HYDRANT
- BIKE RACK
- TRASH/RECYCLING
- MULCH RING AT TREES IN LAWN
- PROPOSED TREE
- EXISTING TREE

0 5 10 20 40
SCALE: 1" = 20'-0"
NORTH

NOT FOR CONSTRUCTION

CITY OF BAINBRIDGE ISLAND

280 MADISON AVE. NORTH
BAINBRIDGE ISLAND, WA 98110

WALKER | MACY

EAGLE HARBOR WATERFRONT PARK

BAINBRIDGE ISLAND, WA

STATE OF WASHINGTON REGISTERED LANDSCAPE ARCHITECT
CHRISTOPHER S. JONES
CERTIFICATE NO. 1371

PROJECT NUMBER:	P3119.01
DRAWN BY: KH	REVIEWED BY: CJ/DO

PHASE:
BID SET

ISSUE DATE:
11/20/2015

REVISIONS:

MATERIALS PLAN

L201

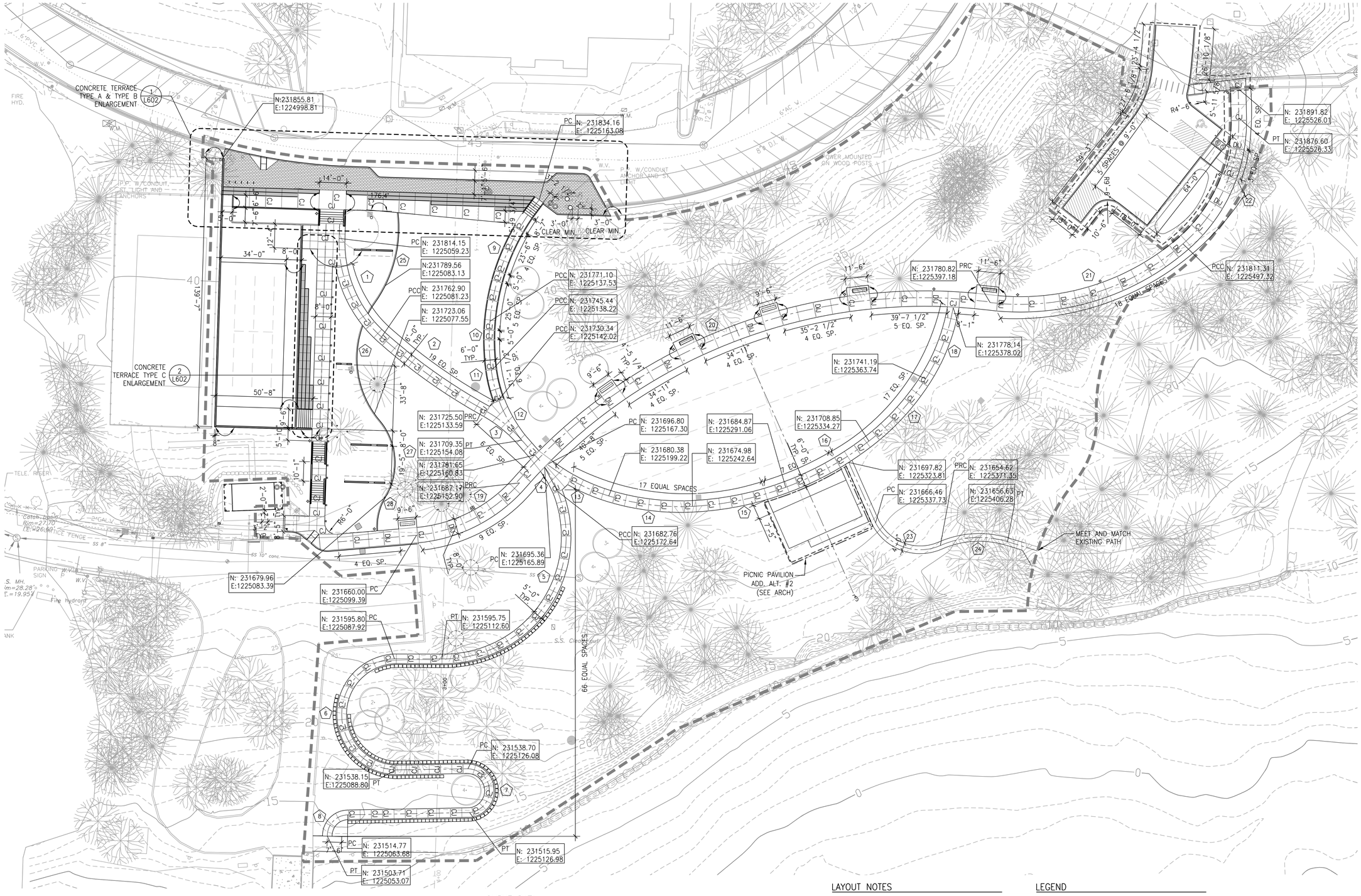

CURVE DATA

CURVE NO.	CURVE RADIUS	CURVE LENGTH	CHORD LENGTH
1	66.00'	57.58'	55.77'
2	297.00'	64.47'	64.34'
3	71.64'	26.24'	26.09'
4	42.19'	14.36'	14.29'
5	63.62'	124.76'	105.71'
6	28.85'	88.56'	57.66'
7	11.40'	34.45'	22.76'
8	10.80'	17.03'	15.32'
9	115.00'	69.07'	68.04'
10	115.00'	25.73'	25.67'
11	72.52'	15.60'	15.57'
12	72.86'	24.32'	24.21'

CURVE NO.	CURVE RADIUS	CURVE LENGTH	CHORD LENGTH
13	100.76'	36.09'	35.90'
14	127.46'	43.97'	43.76'
15	162.57'	49.61'	49.42'
16	162.57'	49.61'	49.42'
17	127.46'	43.97'	43.76'
18	100.76'	39.87'	39.61'
19	80.00'	61.53'	60.02'
20	278.82'	272.31'	261.61'
21	129.00'	107.78'	104.67'
22	84.00'	73.80'	71.45'
23	26.09'	39.24'	35.64'
24	50.00'	35.74'	34.99'

LAYOUT NOTES

1. SITE SURVEY WAS PREPARED BY ADAM AND GOLDSWORTHY, INC. LAND SURVEYING ON 5/9/2014. ALL COORDINATES SHOWN ON THE DRAWINGS ARE BASED UPON THE COORDINATE SYSTEM ESTABLISHED BY THE SURVEYOR. WALKER MACY ASSUMES NO RESPONSIBILITY FOR ACCURACY OF SURVEYED CONDITIONS AS SHOWN. SURVEY INFORMATION IS PROVIDED FOR REFERENCE ONLY.
2. DO NOT SCALE FROM THE DRAWINGS. THE LOCATION OF FEATURES NOT SPECIFICALLY DIMENSIONED MAY NOT BE DETERMINED BY SCALE. IF CONFLICTS ARISE IN THE FIELD, CONTACT OWNER'S REPRESENTATIVE FOR RESOLUTION.
3. ALL DIMENSIONS ARE TO THE OUTSIDE FACE OF BUILDINGS AND WALLS OR BACK OF CURBS, UNLESS OTHERWISE NOTED.
4. ALL CURVED OBJECTS SHALL HAVE SMOOTH, CONTINUOUS CURVES WITH CONSISTENT RADII AS INDICATED. EACH CURVE SHALL MEET ADJACENT CURVES OR LINEAR SECTIONS ON THE TANGENT, UNLESS NOTED OTHERWISE.

LEGEND

- BASELINE
- CENTERLINE
- EXTENSION OF BUILDING FACE
- CJ — CONTRACTION JOINT
- DIJ — DOWELLED ISOLATION JOINT

B	BEARING
C	CHORD LENGTH
EQ	EQUAL
L	LENGTH OF CURVE
OC	ON CENTER
POB	POINT OF BEGINNING
PC	POINT OF CURVATURE
PCC	POINT OF COMPOUND CURVATURE
PRC	POINT OF REVERSE CURVATURE
PI	POINT OF INTERSECTION
PT	POINT OF TANGENCY
R	RADIUS
RP	RADIUS CENTER POINT
SP	SPACES
VIF	VERIFY IN FIELD
	ALIGN

0 5 10 20 40
SCALE: 1" = 20'-0"
NORTH

CITY OF BAINBRIDGE ISLAND

CITY OF BAINBRIDGE ISLAND
280 MADISON AVE. NORTH
BAINBRIDGE ISLAND, WA 98110

WALKER | MACY

EAGLE HARBOR WATERFRONT PARK

BAINBRIDGE ISLAND, WA

STATE OF WASHINGTON REGISTERED LANDSCAPE ARCHITECT
CHRISTOPHER S. JONES
CERTIFICATE NO. 1371

PROJECT NUMBER: P3119.01
DRAWN BY: KH
REVIEWED BY: CJ/DO
PHASE: BID SET
ISSUE DATE: 11/20/2015
REVISIONS:

LAYOUT PLAN

L301

GRADING NOTES

1. VERIFY ACCURACY OF EXISTING GRADES AND INTERPOLATED ELEVATIONS PRIOR TO BEGINNING WORK. NOTIFY OWNER'S REPRESENTATIVE OF ANY DISCREPANCY PRIOR TO BEGINNING WORK.
2. PROTECT ALL TREES INDICATED TO REMAIN.
3. ALL PROPOSED GRADES ARE TO MEET AND BLEND IN WITH EXISTING GRADING AT PROJECT LIMIT, PROPERTY LINES, BUILDING LINES AND EXISTING CURBS.
4. 'ROUND OFF' ALL SHARP RIDGES EXISTING ON SITE WHETHER OR NOT SUCH CONDITIONS ARE INDICATED ON PLANS.
5. NOTIFY THE OWNER'S REPRESENTATIVE TO REVIEW ROUGH GRADES PRIOR TO PLACEMENT OF TOPSOIL; AND FINE GRADING PRIOR TO PLANTING.
6. ALL AREAS SHALL HAVE POSITIVE DRAINAGE TO APPROVED DRAINAGE STRUCTURES OR CONVEYANCES.
7. PROVIDE POSITIVE DRAINAGE AWAY FROM BUILDINGS AT 0.5% SLOPE, MINIMUM.
8. ALL WALKWAYS AND PAVED AREAS SHALL HAVE SMOOTH AND CONTINUOUS ELEVATION CHANGES.
9. SET STRAIGHT GRADES BETWEEN GIVEN ELEVATIONS. UNLESS OTHERWISE INDICATED.
10. PROVIDE 2% MAX. SLOPE, PERPENDICULAR TO DIRECTION OF TRAVEL, ON ALL PAVED PEDESTRIAN SURFACES, UNLESS NOTED OTHERWISE.
11. GRADE BREAK LINES ARE SHOWN GRAPHICALLY TO ILLUSTRATE DRAINAGE PATTERNS AND ARE NOT TO BE INSTALLED AS ACTUAL JOINT LINES, EXCEPT WHERE THEY COINCIDE WITH PAVING JOINTS.
12. INSTALL DRAINS IN PAVING, SQUARE WITH AND ALIGNING TO PAVING JOINTS AS SHOWN.
13. VERIFY IN FIELD THAT AS-BUILT CONDITIONS MATCH PRECISE ELEVATIONS INDICATED ON PLANS.
14. SITE SURVEY WAS PREPARED BY CITY OF BAINBRIDGE ISLAND PUBLIC WORKS ON APRIL 20, 2006. ALL GRADES SHOWN ON THE DRAWINGS ARE BASED UPON THE DATUM ESTABLISHED BY THE SURVEYOR. WALKER MACY ASSUMES NO RESPONSIBILITY FOR ACCURACY OF SURVEYED CONDITIONS AS SHOWN. SURVEY INFORMATION IS PROVIDED FOR REFERENCE ONLY. NOT ALL SURVEYED SPOT ELEVATIONS ARE SHOWN.

LEGEND

29	PROPOSED CONTOUR
(29)	EXISTING CONTOUR
29.72	PROPOSED SPOT ELEVATION
	EXISTING SPOT ELEVATION
GB	GRADE BREAK
	FLOW LINE
MATCH	MATCH EXISTING ELEVATION
4.9%	DIRECTION AND PERCENTAGE OR H:V RATIO OF SLOPE
AD	AREA DRAIN
CB	CATCH BASIN
EA	EACH
FC	FLUSH CURB
FFE	FINISH FLOOR ELEVATION
FG	FINISH GRADE
FL	FLOW LINE
HP	HIGH POINT
HPS	HIGH POINT OF SWALE
LP	LOW POINT
IE	INVERT ELEVATION
BC	BOTTOM OF CURB
TC	TOP OF CURB
BR	BOTTOM OF RAMP
TR	TOP OF RAMP
BS	BOTTOM OF STEP
TS	TOP OF STEP
BW	BOTTOM OF WALL (AT FG OF PAVING)
TW	TOP OF WALL
TD	TRENCH DRAIN
RIM	RIM ELEVATION
R	RISER
T	TREAD
VIF	VERIFY IN FIELD

0 5 10 20 40
SCALE: 1" = 20'-0"
NORTH

CITY OF BAINBRIDGE ISLAND
280 MADISON AVE. NORTH
BAINBRIDGE ISLAND, WA 98110

WALKER | MACY

EAGLE HARBOR WATERFRONT PARK

BAINBRIDGE ISLAND, WA

STATE OF WASHINGTON REGISTERED LANDSCAPE ARCHITECT
CHRISTOPHER S. JONES
CERTIFICATE NO. 1371

PROJECT NUMBER: P3119.01
DRAWN BY: KH
REVIEWED BY: CJ/DO
PHASE: BID SET
ISSUE DATE: 11/20/2015
REVISIONS:

GRADING PLAN

L401

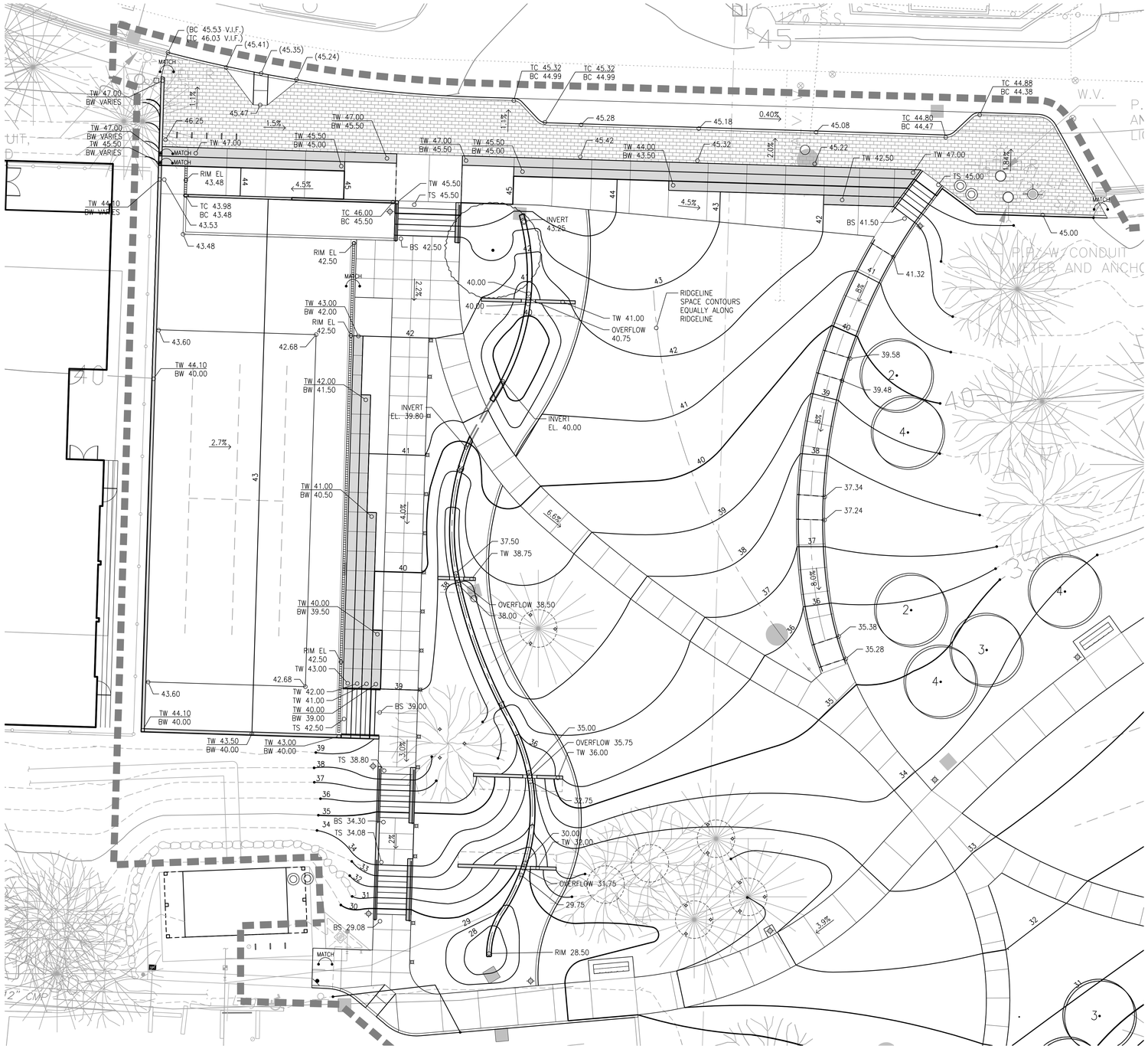

GRADING NOTES

1. VERIFY ACCURACY OF EXISTING GRADES AND INTERPOLATED ELEVATIONS PRIOR TO BEGINNING WORK. NOTIFY OWNER'S REPRESENTATIVE OF ANY DISCREPANCY PRIOR TO BEGINNING WORK.
2. PROTECT ALL TREES INDICATED TO REMAIN.
3. ALL PROPOSED GRADES ARE TO MEET AND BLEND IN WITH EXISTING GRADING AT PROJECT LIMIT, PROPERTY LINES, BUILDING LINES AND EXISTING CURBS.
4. 'ROUND OFF' ALL SHARP RIDGES EXISTING ON SITE WHETHER OR NOT SUCH CONDITIONS ARE INDICATED ON PLANS.
5. NOTIFY THE OWNER'S REPRESENTATIVE TO REVIEW ROUGH GRADES PRIOR TO PLACEMENT OF TOPSOIL; AND FINE GRADING PRIOR TO PLANTING.
6. ALL AREAS SHALL HAVE POSITIVE DRAINAGE TO APPROVED DRAINAGE STRUCTURES OR CONVEYANCES.
7. PROVIDE POSITIVE DRAINAGE AWAY FROM BUILDINGS AT 0.5% SLOPE, MINIMUM.
8. ALL WALKWAYS AND PAVED AREAS SHALL HAVE SMOOTH AND CONTINUOUS ELEVATION CHANGES.
9. SET STRAIGHT GRADES BETWEEN GIVEN ELEVATIONS. UNLESS OTHERWISE INDICATED.
10. PROVIDE 2% MAX. SLOPE, PERPENDICULAR TO DIRECTION OF TRAVEL, ON ALL PAVED PEDESTRIAN SURFACES, UNLESS NOTED OTHERWISE.
11. GRADE BREAK LINES ARE SHOWN GRAPHICALLY TO ILLUSTRATE DRAINAGE PATTERNS AND ARE NOT TO BE INSTALLED AS ACTUAL JOINT LINES, EXCEPT WHERE THEY COINCIDE WITH PAVING JOINTS.
12. INSTALL DRAINS IN PAVING, SQUARE WITH AND ALIGNING TO PAVING JOINTS AS SHOWN.
13. VERIFY IN FIELD THAT AS-BUILT CONDITIONS MATCH PRECISE ELEVATIONS INDICATED ON PLANS.
14. SITE SURVEY WAS PREPARED BY CITY OF BAINBRIDGE ISLAND PUBLIC WORKS ON APRIL 20, 2006. ALL GRADES SHOWN ON THE DRAWINGS ARE BASED UPON THE DATUM ESTABLISHED BY THE SURVEYOR. WALKER MACY ASSUMES NO RESPONSIBILITY FOR ACCURACY OF SURVEYED CONDITIONS AS SHOWN. SURVEY INFORMATION IS PROVIDED FOR REFERENCE ONLY. NOT ALL SURVEYED SPOT ELEVATIONS ARE SHOWN.

LEGEND

29	PROPOSED CONTOUR
(29)	EXISTING CONTOUR
29.72	PROPOSED SPOT ELEVATION
	EXISTING SPOT ELEVATION
58	GRADE BREAK
	FLOW LINE
MATCH	MATCH EXISTING ELEVATION
4.9%	DIRECTION AND PERCENTAGE OR H:V RATIO OF SLOPE
AD	AREA DRAIN
CB	CATCH BASIN
EA	EACH
FC	FLUSH CURB
FFE	FINISH FLOOR ELEVATION
FG	FINISH GRADE
FL	FLOW LINE
HP	HIGH POINT
HPS	HIGH POINT OF SWALE
LP	LOW POINT
IE	INVERT ELEVATION
BC	BOTTOM OF CURB
TC	TOP OF CURB
BR	BOTTOM OF RAMP
TR	TOP OF RAMP
BS	BOTTOM OF STEP
TS	TOP OF STEP
BW	BOTTOM OF WALL (AT FG OF PAVING)
TW	TOP OF WALL
TD	TRENCH DRAIN
RIM	RIM ELEVATION
R	RISER
T	TREAD
VIF	VERIFY IN FIELD

0 2 5 10 20
SCALE: 1" = 10'-0"
NORTH

CITY OF BAINBRIDGE ISLAND
280 MADISON AVE. NORTH
BAINBRIDGE ISLAND, WA 98110

WALKER | MACY

EAGLE HARBOR WATERFRONT PARK
BAINBRIDGE ISLAND, WA

STATE OF WASHINGTON REGISTERED LANDSCAPE ARCHITECT
CHRISTOPHER S. JONES
CERTIFICATE NO. 1371

PROJECT NUMBER: P3119.01
DRAWN BY: KH
REVIEWED BY: CJ/DO
PHASE: BID SET
ISSUE DATE: 11/20/2015
REVISIONS:

GRADING PLAN ENLARGEMENT

L402

PLANT LIST SCHEDULE

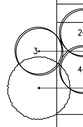

SYMBOL	KEY	BOTANICAL NAME	COMMON NAME	SIZE	SPACING	QTY	COMMENTS
		DECIDUOUS TREES					
2	AMGR	AMELANCHIER X GRANDIFLORA 'AUTUMN BRILLIANCE'	SERVICEBERRY	2" CAL.	AS SHOWN	3	MULTI STEM (NOT GRAFTED), OPEN HABIT
3	AMGR	AMELANCHIER X GRANDIFLORA 'AUTUMN BRILLIANCE'	SERVICEBERRY	3" CAL.	AS SHOWN	5	
4	AMGR	AMELANCHIER X GRANDIFLORA 'AUTUMN BRILLIANCE'	SERVICEBERRY	4" CAL.	AS SHOWN	5	
	NYSY	NYSSA SYLVATICA 'WILDFIRE'	TUPELO	4" CAL.	AS SHOWN	2	
		STORMWATER SWALES & TERRACE					
	COSE	CORNUS SERICEA 'KELSEYI'	KELSEY'S DWARF RED-OSIER DOGWOOD	#5	24" O.C.		SEE 9/L607 FOR PLANTING ENLARGEMENT
	IRDO	IRIS DOUGLASIANA	DOUGLAS IRIS	#2	18" O.C.		
	JUEF	JUNCUS EFFUFUS	SOFT RUSH	#2	18" O.C.		
	SBPT	SPIRAEA BETULIFOLIA 'TOR'	BIRCH-LEAF SPIREA	#5	24" O.C.		
	FOGA	FOTHERGILLA GARDENII 'BLUE SHADOW'	DWARF FOTHERGILLA	#5	24" O.C.		
	RHHG	RHODODENDRON 'HARDY GARDENIA'	EVERGREEN AZALEA	#5	24" O.C.		
		SLOPE AREA A					
	FRVE	FRAGARIA VESCA	WOODLAND STRAWBERRY	4" POT	8" O.C.		SEE 10/L607 FOR PLANTING ENLARGEMENT
R	RONU	ROSA 'WHITE MEIDILAND'	WHITE SHRUB ROSE	#2	18" O.C.		SEE 5/L607 FOR PLANTING ON SLOPE
		SLOPE AREA B					
	FRVE	FRAGARIA VESCA	WOODLAND STRAWBERRY	4" POT	8" O.C.		SEE 11/L607 FOR PLANTING ENLARGEMENT
R	RONU	ROSA 'WHITE MEIDILAND'	WHITE SHRUB ROSE	#2	18" O.C.		SEE 5/L607 FOR PLANTING ON SLOPE
	VAOV	VACCINIUM OVATUM	EVERGREEN HUCKLEBERRY	#2	18" O.C.		
		WOODLAND AREA A					
	FERU	FESTUCA RUBRA 'MOLATE'	MOLATE RED FESCUE	SEED			4 LBS PER 1000 SF
	HYAC	HYACINTHOIDES HISPANICA	SPANISH BLUEBELLS	BULB	12" O.C.	6000 BULBS	PLANT IN GROUPS OF 6-20 AS DIRECTED BY ARCHITECT OR CITY ENGAGED HORTICULTURALIST
		WOODLAND AREA B					
A	ARDI	ARUNCUS DIOICUS 'KNEIFFII'	GOATSBEARD	#3	24" O.C.		SEE 12/L607 FOR PLANTING ENLARGEMENT
	FRVE	FRAGARIA VESCA	WOODLAND STRAWBERRY	4" POT	8" O.C.		
		WOODLAND AREA C					
	POMU	POLYSTICHUM MUNITUM	WESTERN SWORDFERN	#2	24" O.C.	ASSUME COVERAGE OF 1/3 OF TOTAL WOODLAND AREA SHOWN ON PLAN	PLANT IN GROUPS OF 10 AS DIRECTED BY ARCHITECT OR CITY ENGAGED HORTICULTURALIST
		WOODLAND AREA D					
	POMU	POLYSTICHUM MUNITUM	WESTERN SWORDFERN	#2	24" O.C.	ASSUME COVERAGE OF 1/3 OF TOTAL WOODLAND AREA SHOWN ON PLAN	PLANT IN GROUPS OF 10 AS DIRECTED BY ARCHITECT OR CITY ENGAGED HORTICULTURALIST

LEGEND

- IRRIGATED LAWN
- ROOT BARRIER
- MULCH RING AT TREES IN LAWN

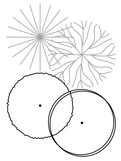

- EXISTING TREES
- PROPOSED TREES

PLANTING NOTES

1. CONTRACTOR TO VERIFY LOCATION OF EXISTING TREES INDICATED TO REMAIN PRIOR TO SOIL PREPARATION. PROTECT ALL TREES AND SHRUBS INDICATED TO REMAIN. COORDINATE WITH THE OWNER'S REPRESENTATIVE.

2. PLANTING AREAS TO BE SUFFICIENTLY CLEANED OF ALL CONSTRUCTION MATERIALS, INCLUDING IMPORTED ROCK, TO THE SATISFACTION OF THE OWNER'S REPRESENTATIVE BEFORE BEGINNING ANY LANDSCAPE WORK.

3. IDENTIFY ALL PLANTING AREAS IN FIELD WITH WHITE FIELD-MARKING CHALK OR APPROVED EQUAL. PLANTING BEDS TO BE ADJUSTED AND APPROVED BY OWNER'S REPRESENTATIVE PRIOR TO PLANT LOCATION.

4. CONTRACTOR TO STAKE LOCATIONS OF ALL PROPOSED TREES. TREE LOCATIONS TO BE APPROVED OR ADJUSTED BY OWNER'S REPRESENTATIVE PRIOR TO PLANTING.

5. FOR PLANTING OCCURRING IN MASSES OF SAME SPECIES PLANT, LABELING REFERS TO ALL ADJACENT IDENTICAL SYMBOLS. REFER TO DETAILS AND LEGEND FOR SPACING INFORMATION.

6. THE OWNER'S REPRESENTATIVE WILL APPROVE INDIVIDUAL PLANT MATERIAL AND LOCATION OF PLANT MATERIAL PRIOR TO INSTALLATION. REFER TO SPECIFICATIONS FOR PROCEDURE.

7. SHRUBS AND GROUNDCOVER TO BE PLANTED A MINIMUM OF ONE HALF THEIR ON CENTER SPACING AWAY FROM PAVEMENT EDGES; UNLESS OTHERWISE NOTED.

8. PROVIDE ROOT BARRIER AROUND ALL TREES WITHIN 5' OF PAVING, CURBS, WALLS, BUILDINGS, UTILITY DUCTS AND OTHER APPURTENANCES.

9. PLANT QUANTITIES INDICATED ARE FOR THE CONVENIENCE OF THE CONTRACTOR ONLY. CONTRACTOR IS RESPONSIBLE FOR PROVIDING PLANTS IN QUANTITIES AND LOCATIONS SHOWN ON DRAWINGS.

10. PROVIDE JUTE NETTING ON ALL SLOPES WITH GRADIENT OF 3:1 OR GREATER AS DIRECTED IN THE FIELD BY THE OWNER'S REPRESENTATIVE. STAPLE FABRIC TO GROUND WITH METAL STAKES AT 4' O.C.

11. IRRIGATION SYSTEM WILL BE DESIGN BUILD, SEE SPECIFICATIONS.

NOT FOR CONSTRUCTION

CITY OF BAINBRIDGE ISLAND
280 MADISON AVE. NORTH
BAINBRIDGE ISLAND, WA 98110

WALKER | MACY

EAGLE HARBOR WATERFRONT PARK
BAINBRIDGE ISLAND, WA

STATE OF WASHINGTON REGISTERED LANDSCAPE ARCHITECT
CHRISTOPHER S. JONES
CERTIFICATE NO. 1371

PROJECT NUMBER: P3119.01
DRAWN BY: KH
REVIEWED BY: CJ/DO
PHASE: BID SET
ISSUE DATE: 11/20/2015
REVISIONS:

PLANTING LEGEND

L500

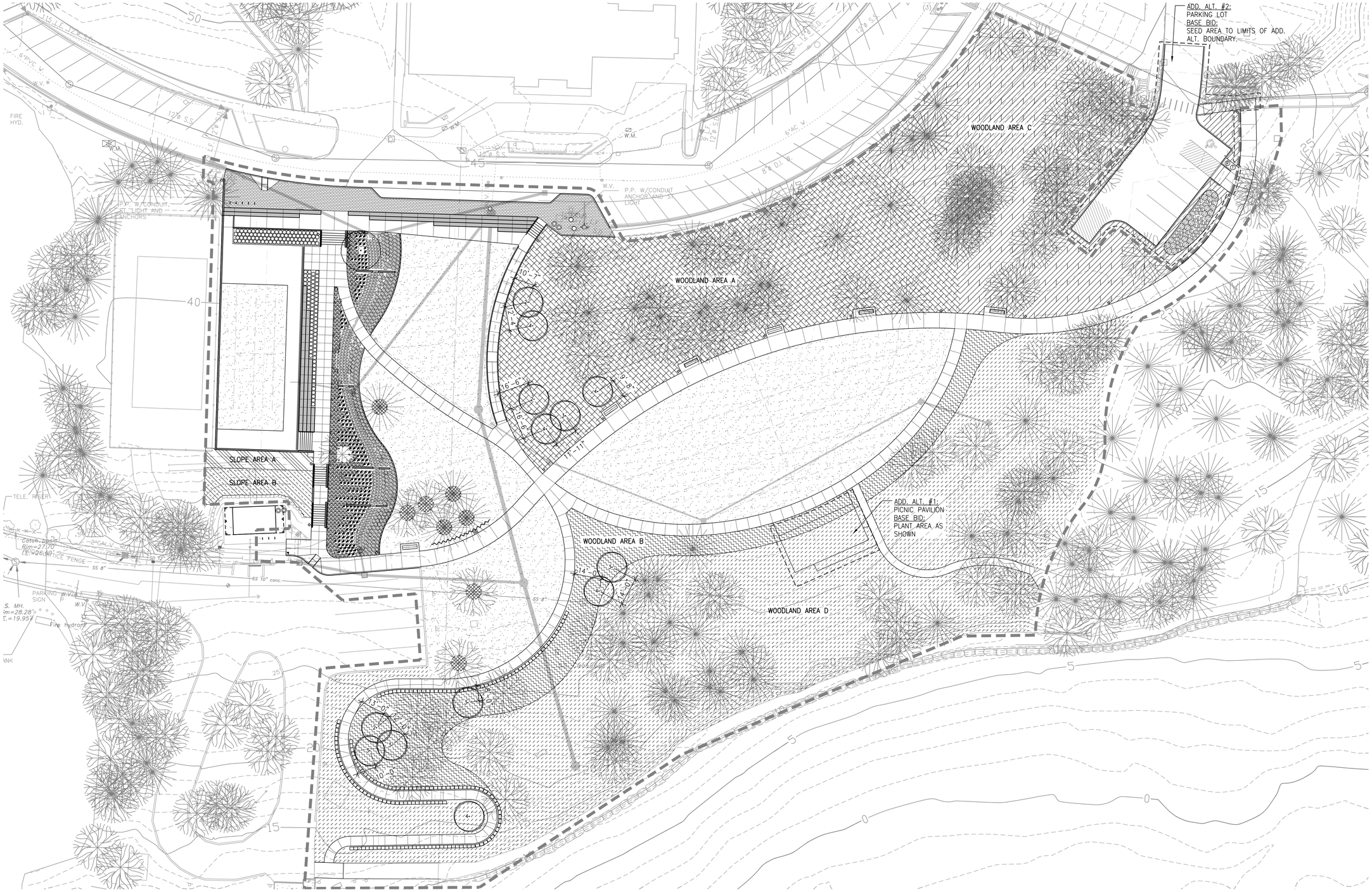

NOT FOR CONSTRUCTION

0 5 10 20 40
SCALE: 1" = 20'-0"

NORTH

CITY OF BAINBRIDGE ISLAND

280 MADISON AVE. NORTH
BAINBRIDGE ISLAND, WA 98110

WALKER | MACY

EAGLE HARBOR WATERFRONT PARK

BAINBRIDGE ISLAND, WA

STATE OF WASHINGTON REGISTERED LANDSCAPE ARCHITECT

CHRISTOPHER S. JONES
CERTIFICATE NO. 1371

PROJECT NUMBER:	P3119.01
DRAWN BY: KH	REVIEWED BY: CJ/DO

PHASE:
BID SET

ISSUE DATE:
11/20/2015

REVISIONS:

PLANTING PLAN

L501

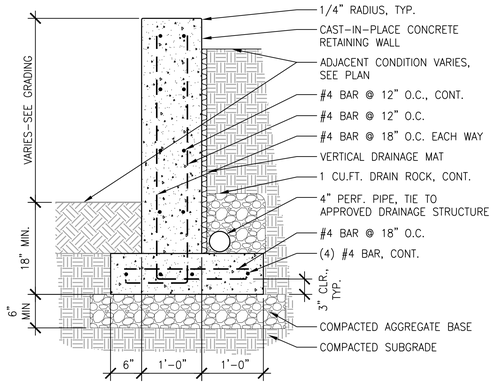

13 CONCRETE RETAINING WALL
SCALE: 1" = 1'-0" SECTION

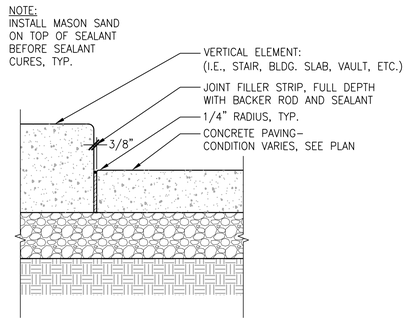

9 ISOLATION JOINT AT VERTICAL ELEMENT
SCALE: 1 1/2" = 1'-0" SECTION

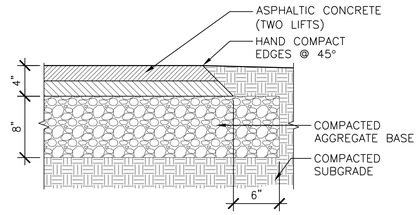

5 ASPHALT PAVING VEHICULAR
SCALE: 1 1/2" = 1'-0" SECTION

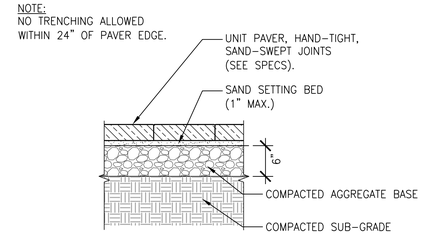

1 PEDESTRIAN CONCRETE UNIT PAVERS
SCALE: 1" = 1'-0" SECTION

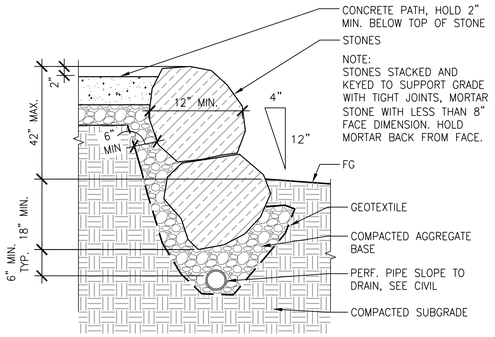

14 DRY STACK BOULDER WALL
SCALE: 1" = 1'-0" SECTION

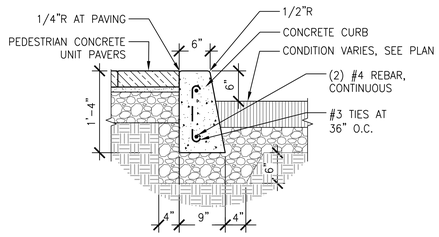

10 CONCRETE CURB
SCALE: 1" = 1'-0" SECTION

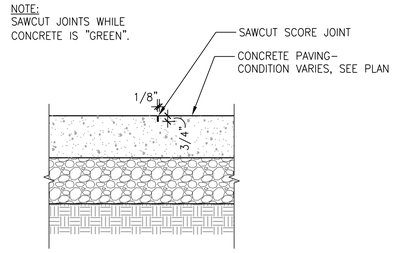

6 SCORE JOINT - SAW CUT
SCALE: 1 1/2" = 1'-0" SECTION

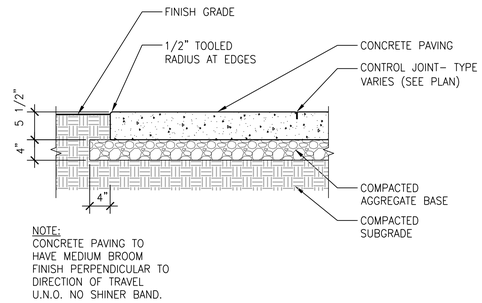

2 PEDESTRIAN CONCRETE PAVING
SCALE: 1" = 1'-0" SECTION

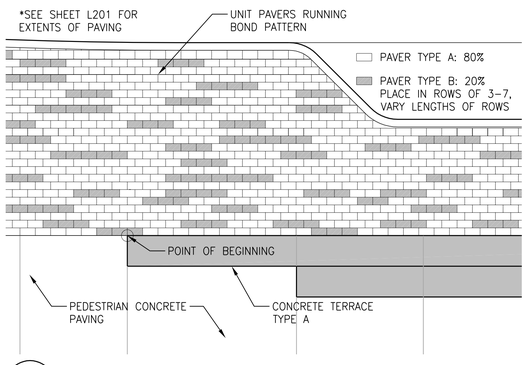

15 UNIT PAVER LAYOUT
SCALE: 1/4" = 1'-0" PLAN

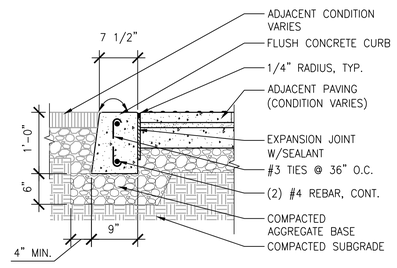

11 CONCRETE CURB FLUSH
SCALE: 1" = 1'-0" SECTION

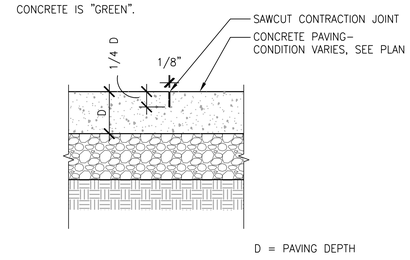

7 CONTRACTION JOINT - SAW CUT
SCALE: 1 1/2" = 1'-0" SECTION

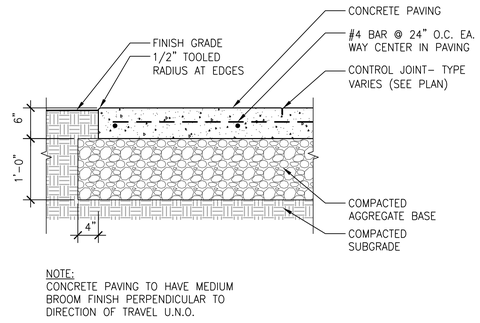

3 VEHICULAR CONCRETE PAVING
SCALE: 1" = 1'-0" SECTION

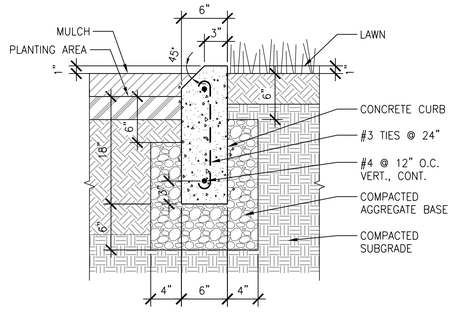

12 CONCRETE EDGER
SCALE: 1 1/2" = 1'-0" SECTION

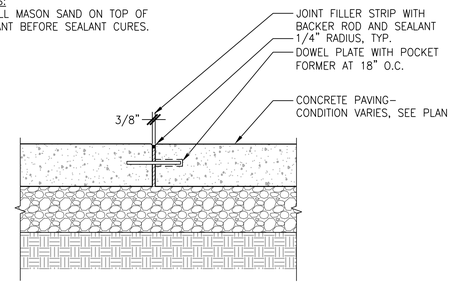

8 DOWELLED ISOLATION JOINT (DIJ)
SCALE: 1 1/2" = 1'-0" SECTION

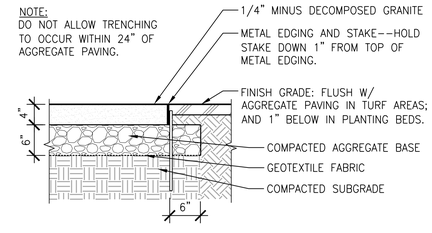

4 DECOMPOSED AGGREGATE PAVING
SCALE: 1" = 1'-0" SECTION

CITY OF BAINBRIDGE ISLAND
280 MADISON AVE. NORTH
BAINBRIDGE ISLAND, WA 98110

WALKER | MACY

STATE OF WASHINGTON REGISTERED LANDSCAPE ARCHITECT
CHRISTOPHER S. JONES
CERTIFICATE NO. 1371

EAGLE HARBOR WATERFRONT PARK
BAINBRIDGE ISLAND, WA

PROJECT NUMBER: P3119.01
DRAWN BY: KH
REVIEWED BY: CJ/DO
PHASE: BID SET
ISSUE DATE: 11/20/2015
REVISIONS:

SITE DETAILS

L600

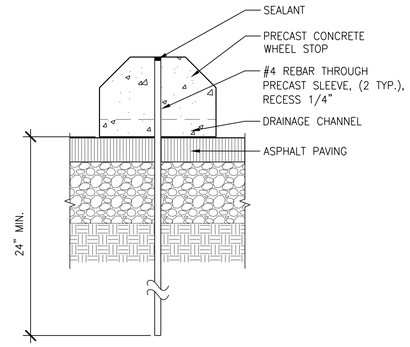

5 WHEELSTOP
SCALE: 1" = 1'-0" SECTION

NOTE:
VERTICAL HEIGHTS NOTED ARE NOMINAL TO ILLUSTRATE RELATIVE LOCALIZED HEIGHT DIFFERENCES. SEE GRADING PLAN FOR SPOT ELEVATIONS.

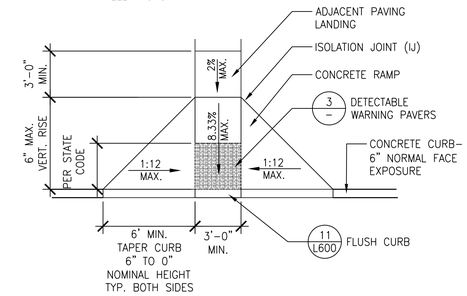

1 CURB RAMP – TYPE A
SCALE: 1/4" = 1'-0" SECTION

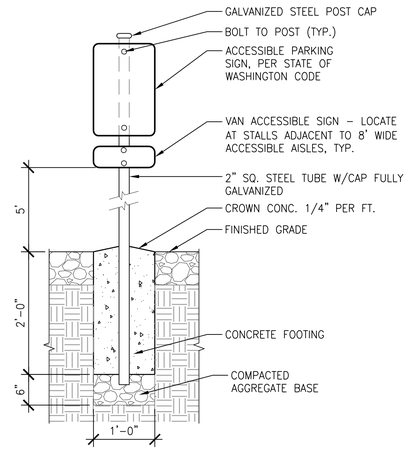

6 ADA PARKING SIGN
SCALE: 1" = 1'-0" SECTION

NOTE:
SEE GRADING PLAN FOR SPOT ELEVATIONS.

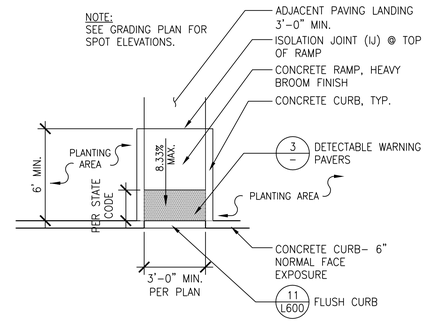

2 CURB RAMP – TYPE B
SCALE: 1/4" = 1'-0" SECTION

NOTES:
1. ALL PARKING SHALL COMPLY WITH WASHINGTON ADMINISTRATIVE CODE (WAC) SECTION 51-50.
2. ADA SIGN TO BE MOUNTED PER WAC SECTION 51-50.
3. ADA SYMBOL SHALL BE CENTERED IN PARKING STALL.

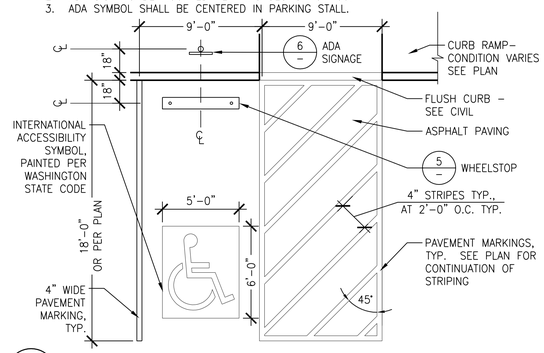

7 ACCESSIBLE PARKING
SCALE: 1/4" = 1'-0" SECTION

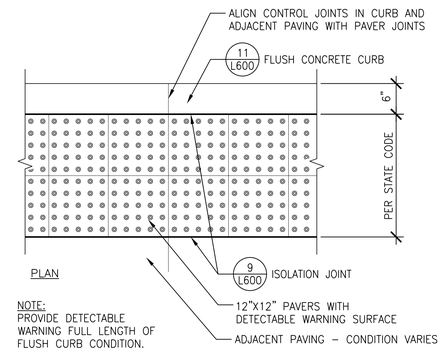

PLAN

NOTE:
PROVIDE DETECTABLE WARNING FULL LENGTH OF FLUSH CURB CONDITION.

3 DETECTABLE WARNING PAVERS – MORTAR SET
SCALE: 1" = 1'-0" PLAN

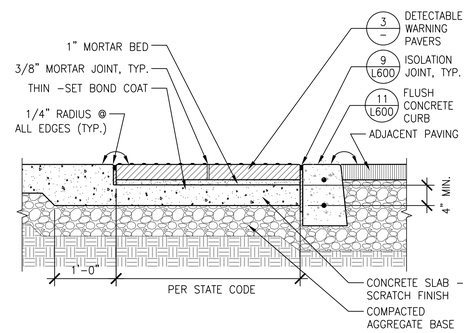

4 DETECTABLE WARNING PAVERS – MORTAR SET
SCALE: 1" = 1'-0" SECTION

CITY OF BAINBRIDGE ISLAND
280 MADISON AVE. NORTH
BAINBRIDGE ISLAND, WA 98110

WALKER | MACY

EAGLE HARBOR WATERFRONT PARK
BAINBRIDGE ISLAND, WA

STATE OF WASHINGTON REGISTERED LANDSCAPE ARCHITECT
CHRISTOPHER S. JONES
CERTIFICATE NO. 1371

PROJECT NUMBER:	P3119.01
DRAWN BY: KH	REVIEWED BY: CJ/DO
PHASE: BID SET	
ISSUE DATE: 11/20/2015	
REVISIONS:	

SITE DETAILS

L601

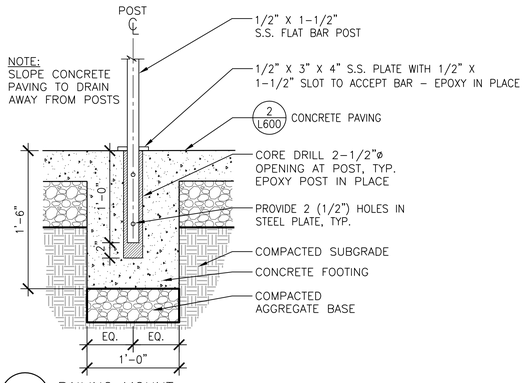

8 RAILING MOUNT
SCALE: 1 1/2" = 1'-0" SECTION

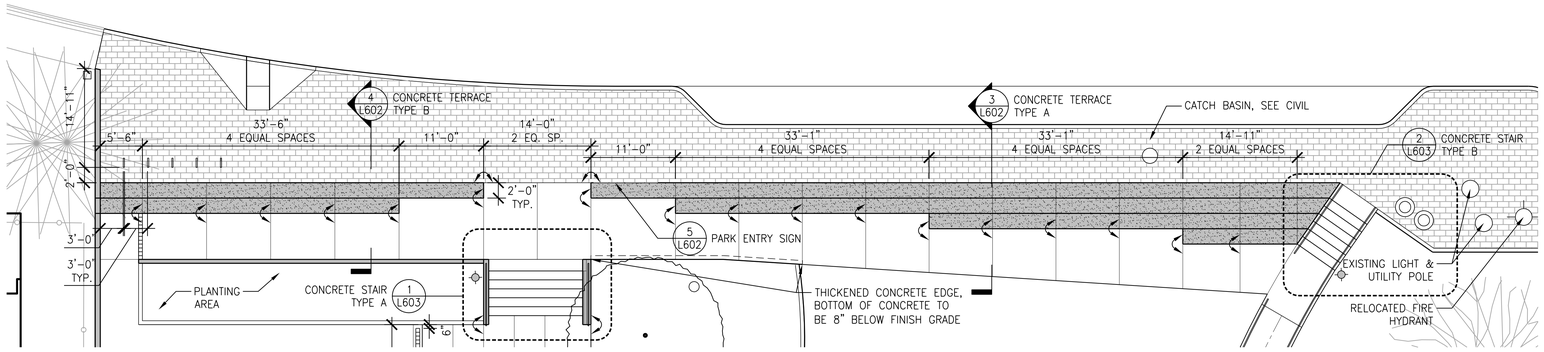

1 CONCRETE TERRACE TYPE A & TYPE B ENLARGEMENT
SCALE: 1/8" = 1'-0" PLAN

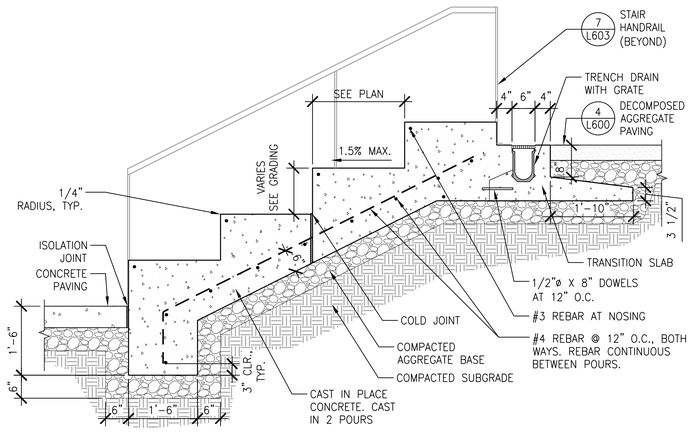

6 CONCRETE TERRACE TYPE C - SECTION
SCALE: 3/4" = 1'-0" SECTION

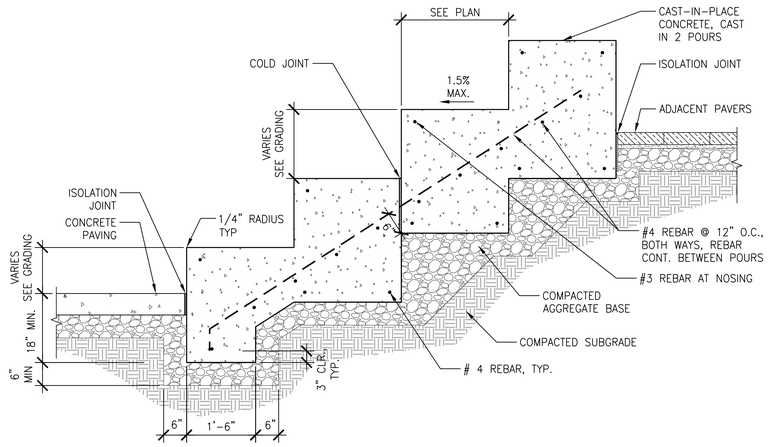

3 CONCRETE TERRACE TYPE A - SECTION
SCALE: 3/4" = 1'-0" SECTION

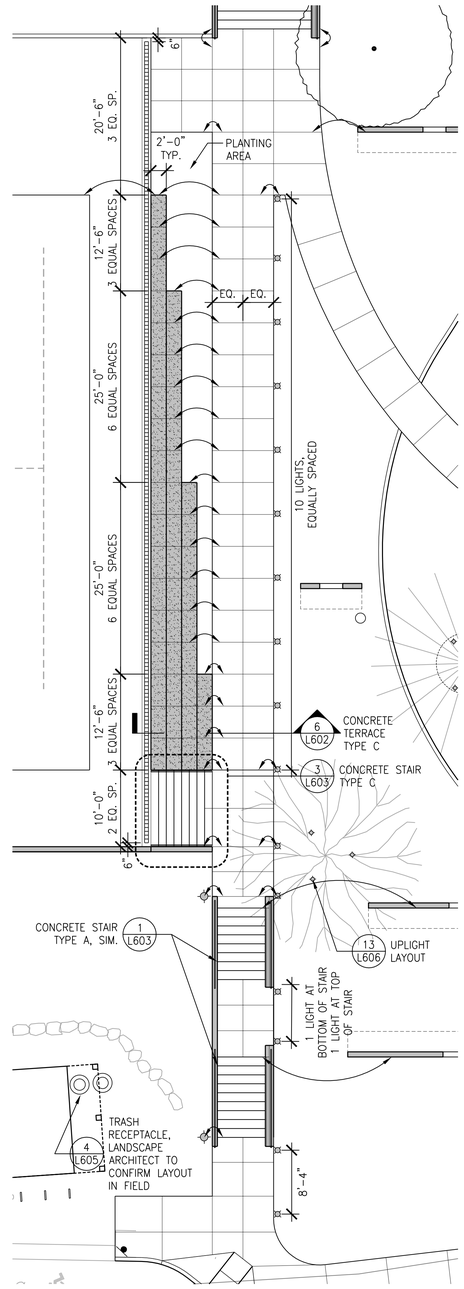

2 CONCRETE TERRACE TYPE C ENLARGEMENT
SCALE: 1/8" = 1'-0" PLAN

NOTES:
1. SUBMIT HANDRAIL SHOP DRAWINGS FOR APPROVAL BY ARCHITECT.
2. CONTINUOUS SEAM-WELD ALL JOINTS. GRIND WELDS SMOOTH. EASE ALL EDGES.
3. RAILING IS CONTINUOUS, NO BREAKS @ LANDINGS

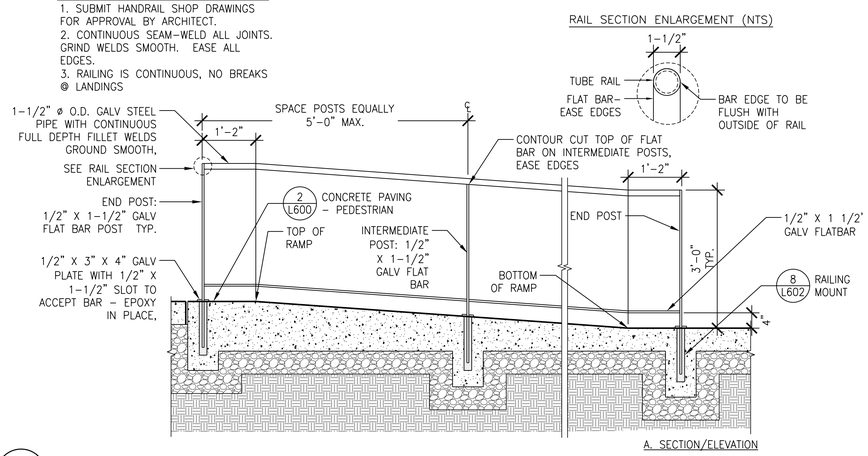

7 RAMP HANDRAIL
SCALE: 3/4" = 1'-0" SECTION

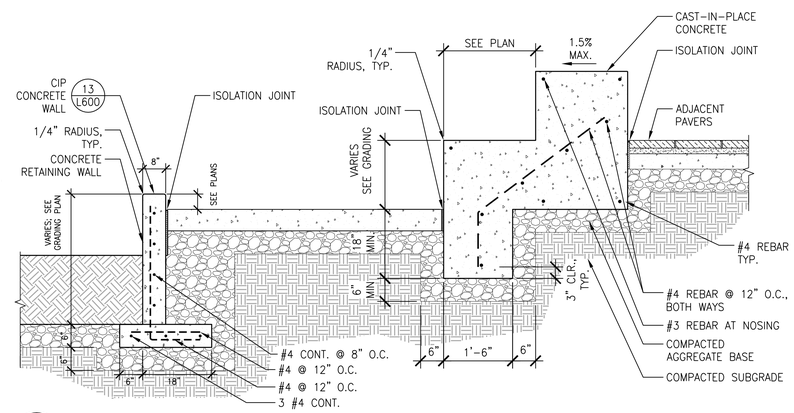

4 CONCRETE TERRACE TYPE B - SECTION
SCALE: 3/4" = 1'-0" SECTION

NOTES:
1. PROVIDE SHOP DRAWINGS ILLUSTRATING LETTER HEIGHTS, SPACING BETWEEN LETTERS, DEPTH OF LETTERS, DIMENSIONAL BORDER CONDITIONS TO EDGE OF SIGN PANEL AND AREA OF LETTER TO RECEIVE PAINT APPLICATION.
2. SUBMIT SAMPLES OF LETTER MOLD AND A CASTING OF A MINIMUM OF 2 LETTERS IN CONCRETE SURFACE DEMONSTRATING FINISHES, SURFACE TEXTURES, EDGE DETAILING AND EXPECTED QUALITY OF FINISH PRODUCT.
3. LETTER MOLD- CONSTRUCT FROM POLYSTYRENE OR SIMILAR MATERIAL OF A THICKNESS TO ACHIEVE DEPTH OF LETTERS INDICATED.
4. TYPE STYLE SHALL BE: GILL SANS, ALL CAPITAL LETTERS, 4 INCH LETTER HEIGHT.
5. FIRMLY ATTACH LETTERS TO FORMWORK AND SEAL LETTER EDGES TO DETER LEAKAGE OF CONCRETE, SPALLING OF CONCRETE AND TO ACHIEVE CRISP EDGE CONDITIONS. APPLY FORM RELEASE AGENT TO LETTERS TO PREVENT BONDING.

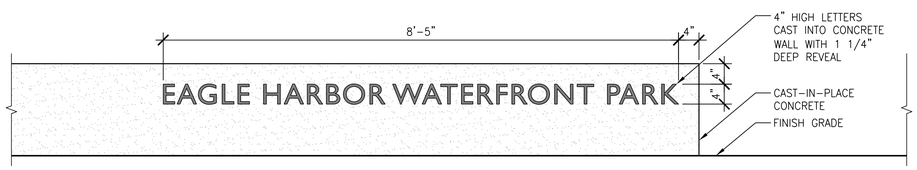

5 CONCRETE TERRACE TYPE A - ENTRY SIGN ELEVATION
SCALE: 1" = 1'-0" SECTION

CITY OF BAINBRIDGE ISLAND
280 MADISON AVE. NORTH
BAINBRIDGE ISLAND, WA 98110

WALKER | MACY

STATE OF WASHINGTON REGISTERED LANDSCAPE ARCHITECT
CHRISTOPHER S. JONES
CERTIFICATE NO. 1371

EAGLE HARBOR WATERFRONT PARK

BAINBRIDGE ISLAND, WA

PROJECT NUMBER: P3119.01
DRAWN BY: KH REVIEWED BY: CJ/DO
PHASE: BID SET
ISSUE DATE: 11/20/2015
REVISIONS:

SITE DETAILS

L602

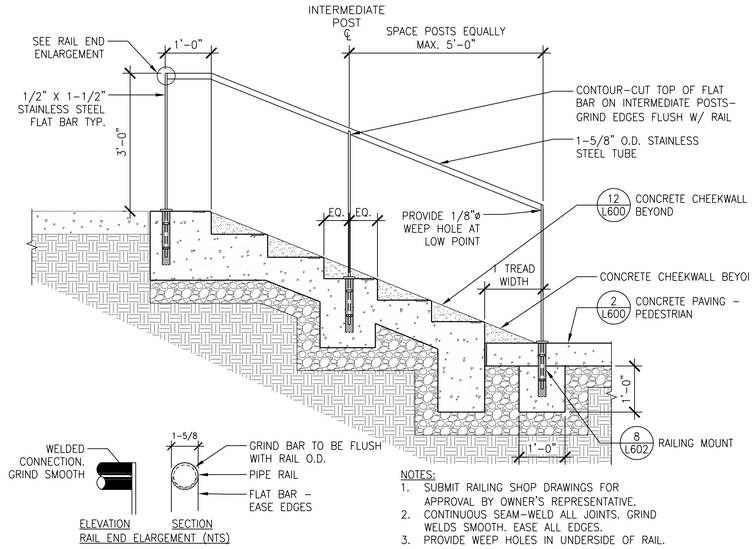

7 STAIR HANDRAIL
SCALE: 3/4" = 1'-0" SECTION

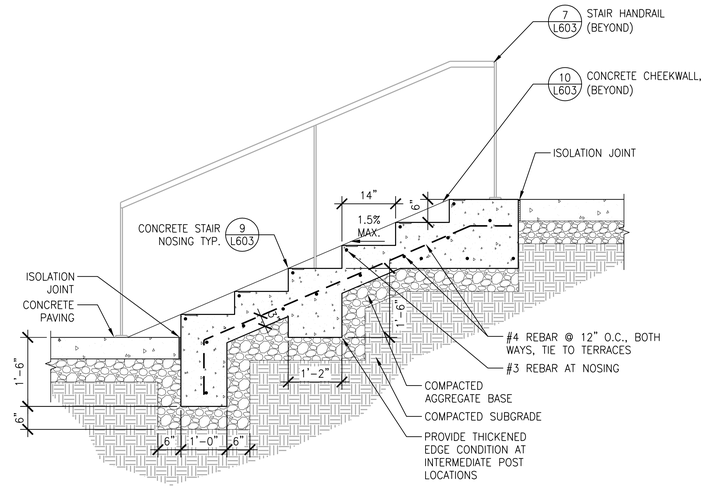

4 CONCRETE STAIRS TYPE A - SECTION
SCALE: 3/4" = 1'-0" SECTION

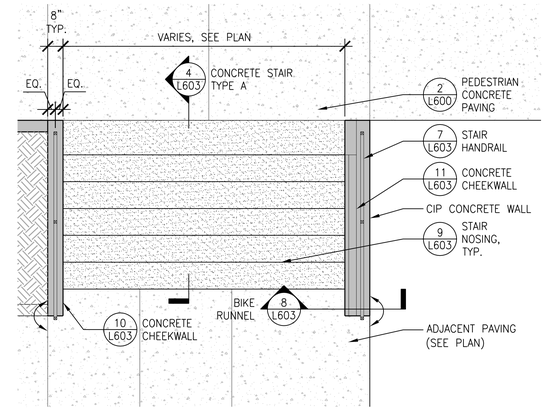

1 CONCRETE STAIRS TYPE A
SCALE: 3/8" = 1'-0" PLAN

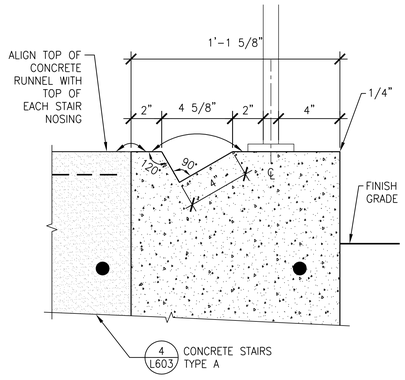

8 BIKE RUNNEL
SCALE: 3" = 1'-0" SECTION

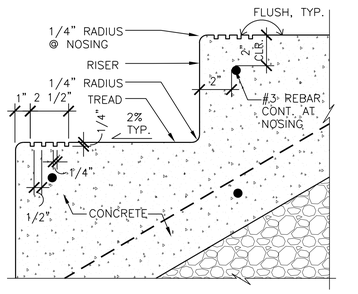

9 STAIR NOSING
SCALE: 3" = 1'-0" SECTION

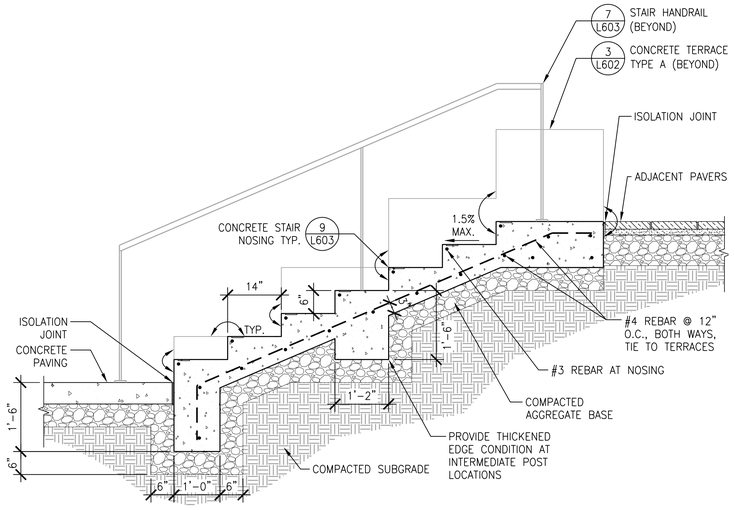

5 CONCRETE STAIRS TYPE B - SECTION
SCALE: 3/4" = 1'-0" SECTION

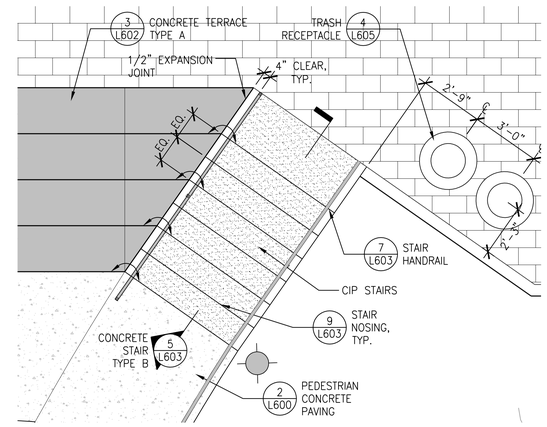

2 CONCRETE STAIRS TYPE B
SCALE: 3/8" = 1'-0" PLAN

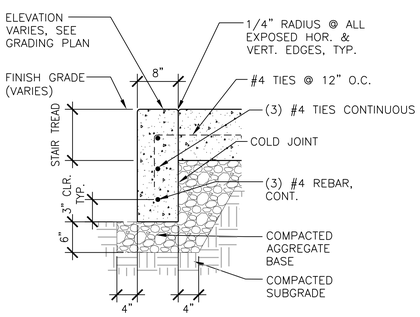

10 8" CHEEK WALL
SCALE: 1 1/2" = 1'-0" SECTION

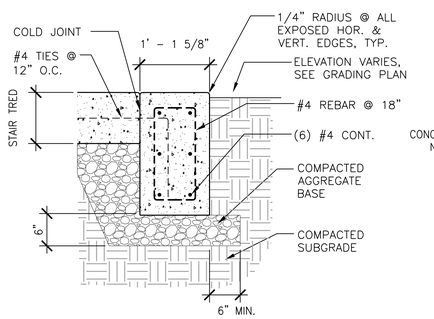

11 CHEEK WALL
SCALE: 1" = 1'-0" SECTION

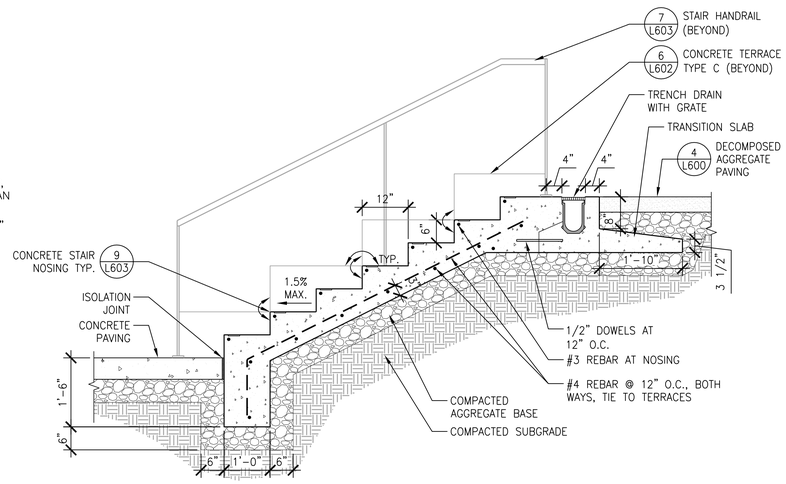

6 CONCRETE STAIRS TYPE C - SECTION
SCALE: 3/4" = 1'-0" SECTION

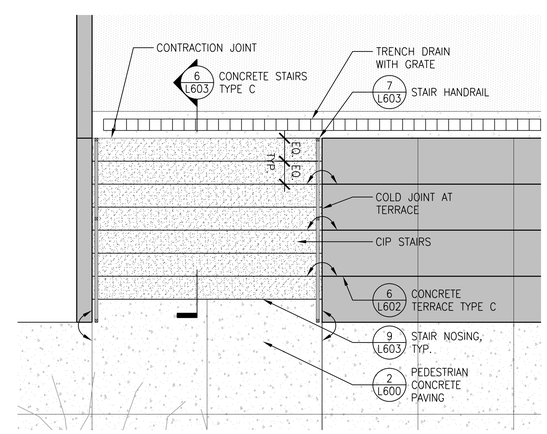

3 CONCRETE STAIRS TYPE C
SCALE: 3/8" = 1'-0" PLAN

CITY OF BAINBRIDGE ISLAND
280 MADISON AVE. NORTH
BAINBRIDGE ISLAND, WA 98110

WALKER | MACY

EAGLE HARBOR WATERFRONT PARK
BAINBRIDGE ISLAND, WA

STATE OF WASHINGTON REGISTERED LANDSCAPE ARCHITECT
CHRISTOPHER S. JONES
CERTIFICATE NO. 1371

PROJECT NUMBER:	P3119.01
DRAWN BY: KH	REVIEWED BY: CJ/DO
PHASE: BID SET	
ISSUE DATE: 11/20/2015	
REVISIONS:	

SITE DETAILS

L603

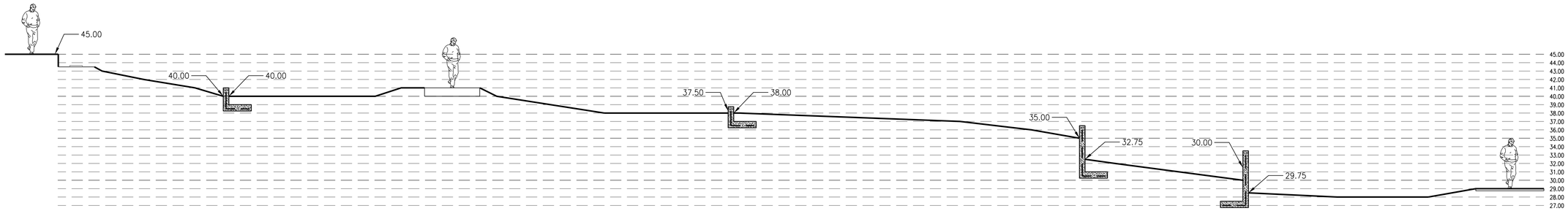

1 STORMWATER WEIRS
SCALE: 3/16" = 1'-0"
SECTION

WEIR SCHEDULE

LOCATION	LENGTH	TOP OF WALL	SCUPPER ELEVATION
A	20'	41.00	40.75
B	8'	38.75	38.50
C	19'	36.00	35.75
D	21'	32.00	31.75

2 STORMWATER WEIR SCHEDULE
NTS
SCHEDULE

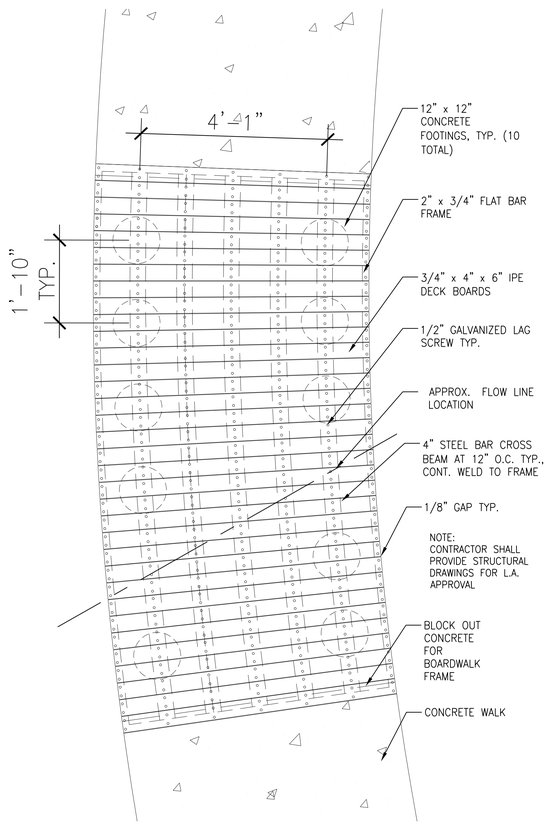

9 BOARDWALK
SCALE: 3/4" = 1'-0"
SECTION

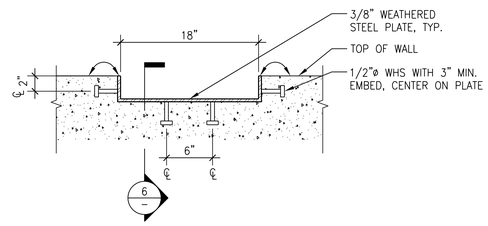

5 STEEL SCUPPER
SCALE: 1 1/2" = 1'-0"
DETAIL

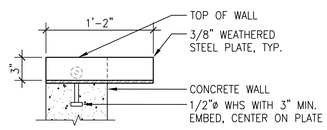

6 STEEL SCUPPER
SCALE: 1 1/2" = 1'-0"
DETAIL

3 STORMWATER WEIR
SCALE: 1" = 1'-0"
SECTION

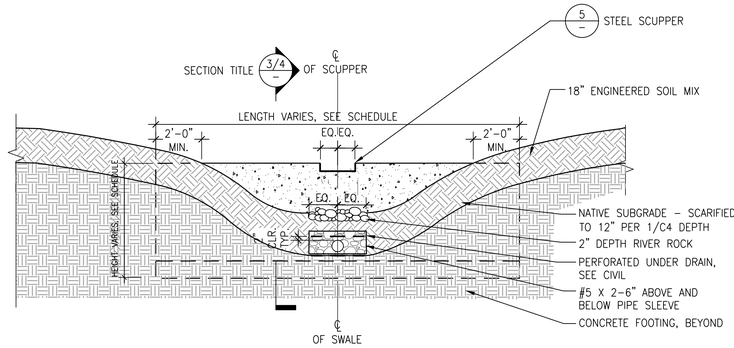

7 STORMWATER WEIRS
SCALE: 3/8" = 1'-0"
SECTION

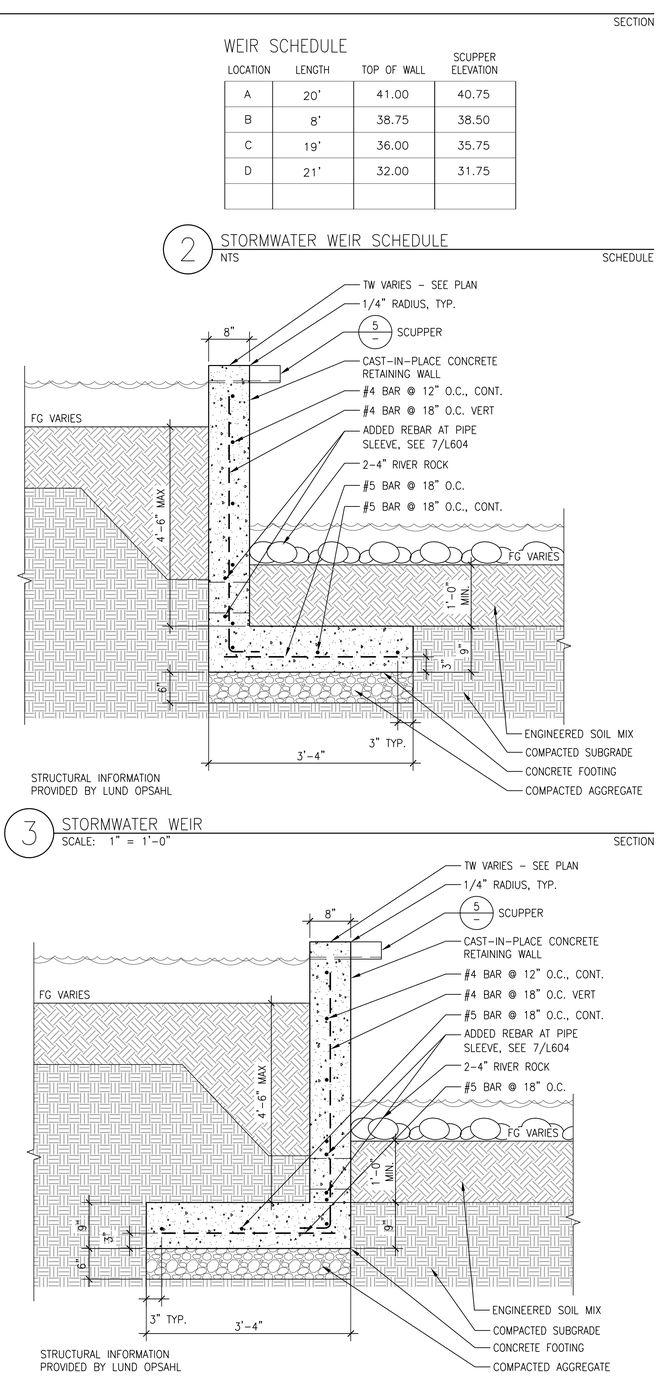

4 STORMWATER WEIR
SCALE: 3/8" = 1'-0"
AXON

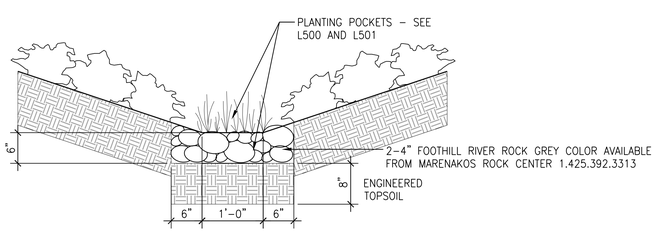

8 STONE BASIN
SCALE: 1" = 1'-0"
SECTION

NOT FOR CONSTRUCTION

CITY OF BAINBRIDGE ISLAND
280 MADISON AVE. NORTH
BAINBRIDGE ISLAND, WA 98110

WALKER | MACY

EAGLE HARBOR WATERFRONT PARK
BAINBRIDGE ISLAND, WA

STATE OF WASHINGTON REGISTERED LANDSCAPE ARCHITECT
CHRISTOPHER S. JONES
CERTIFICATE NO. 1371

PROJECT NUMBER: P3119.01
DRAWN BY: KH
REVIEWED BY: CJ/DO
PHASE: BID SET
ISSUE DATE: 11/20/2015
REVISIONS:

STORMWATER DETAILS

L604

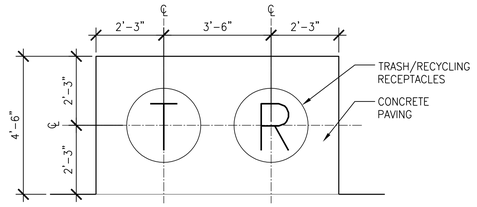

4 TRASH RECEPTACLE
SCALE: 1/2" = 1'-0" PLAN

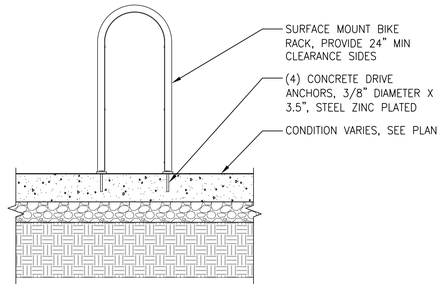

1 BIKE RACK
SCALE: 1" = 1'-0" SECTION

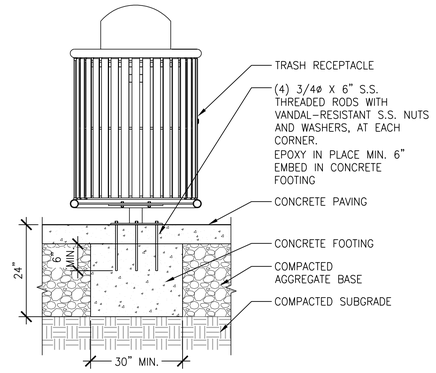

5 TRASH RECEPTACLE
SCALE: 3/4" = 1'-0" SECTION

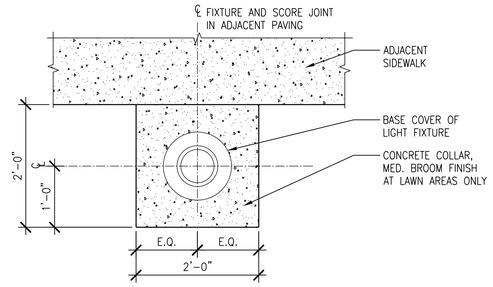

PLAN

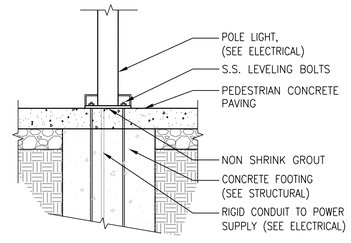

SECTION

2 CONCRETE COLLAR AT LIGHT FIXTURE BASE
SCALE: 1" = 1'-0" SECTION

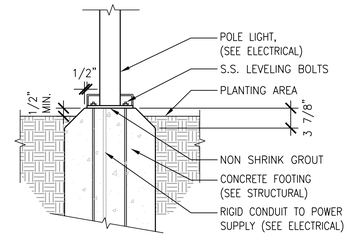

SECTION

3 CONCRETE COLLAR AT LIGHT FIXTURE BASE IN PLANTING
SCALE: 1" = 1'-0" SECTION

CITY OF BAINBRIDGE ISLAND
280 MADISON AVE. NORTH
BAINBRIDGE ISLAND, WA 98110

WALKER | MACY

EAGLE HARBOR WATERFRONT PARK
BAINBRIDGE ISLAND, WA

STATE OF WASHINGTON REGISTERED LANDSCAPE ARCHITECT
CHRISTOPHER S. JONES
CERTIFICATE NO. 1371

PROJECT NUMBER: P3119.01
DRAWN BY: KH
REVIEWED BY: CJ/DO
PHASE: BID SET
ISSUE DATE: 11/20/2015
REVISIONS:

SITE FURNISHING DETAILS

L605

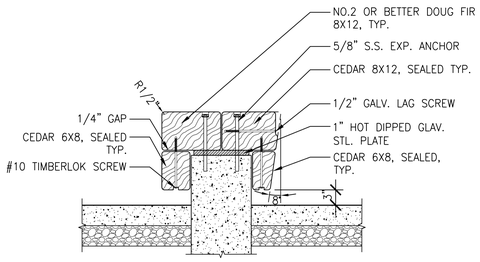

7 WOOD BENCH TYPE A SECTION A
SCALE: 1" = 1'-0" SECTION

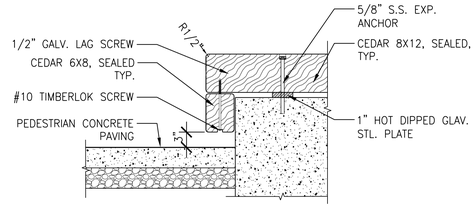

4 WOOD BENCH TYPE A/B SECTION B
SCALE: 1" = 1'-0" SECTION

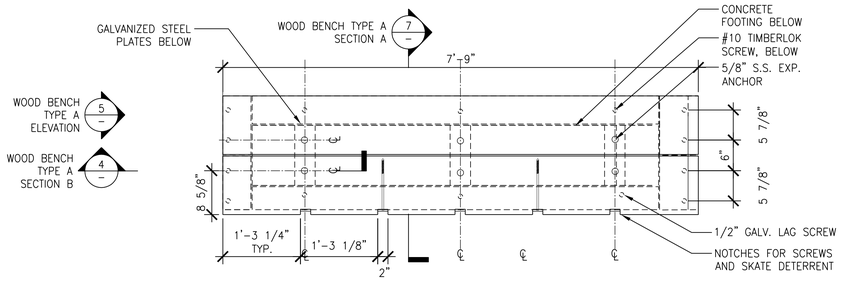

1 WOOD BENCH TYPE A PLAN
SCALE: 1 " = 1'-0" PLAN

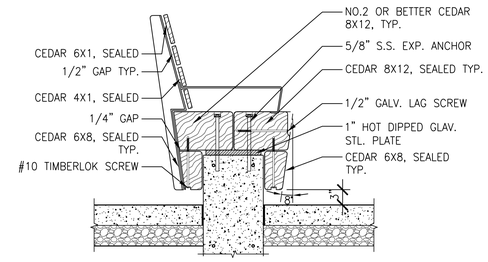

8 WOOD BENCH TYPE B
SCALE: 1" = 1'-0" SECTION

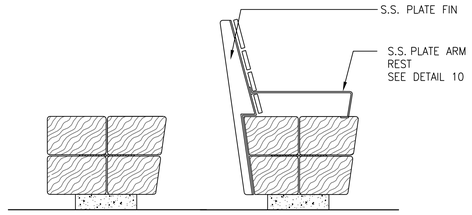

5 WOOD BENCH TYPE A/B END ELEVATION
SCALE: 1" = 1'-0" ELEVATION

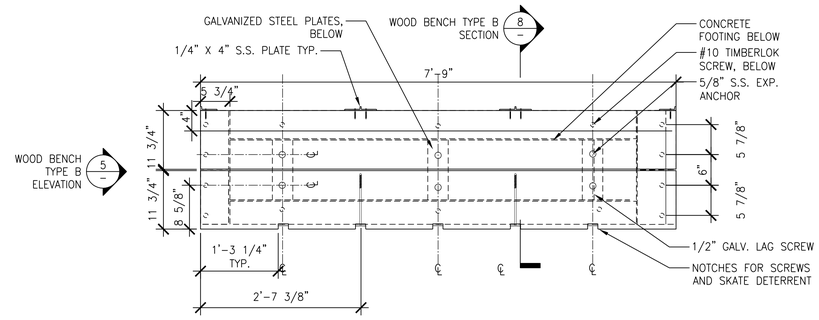

2 WOOD BENCH TYPE B
SCALE: 1 " = 1'-0" PLAN

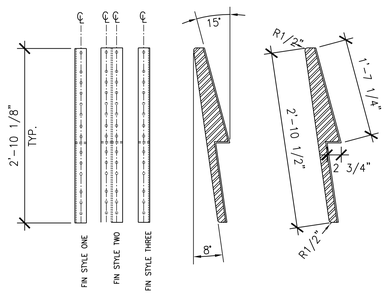

9 WOOD BENCH TYPE B S.S. FINS
SCALE: 1" = 1'-0" SECTION / PLAN

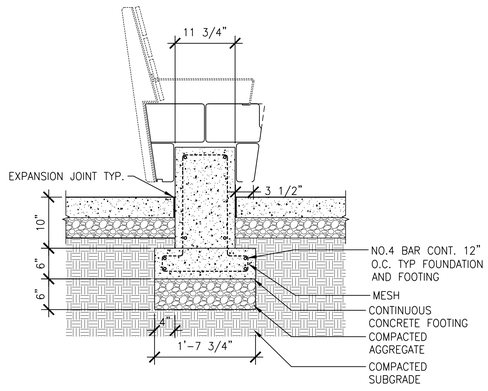

6 WOOD BENCH TYPE A/B FOOTING
SCALE: 1" = 1'-0" SECTION / PLAN

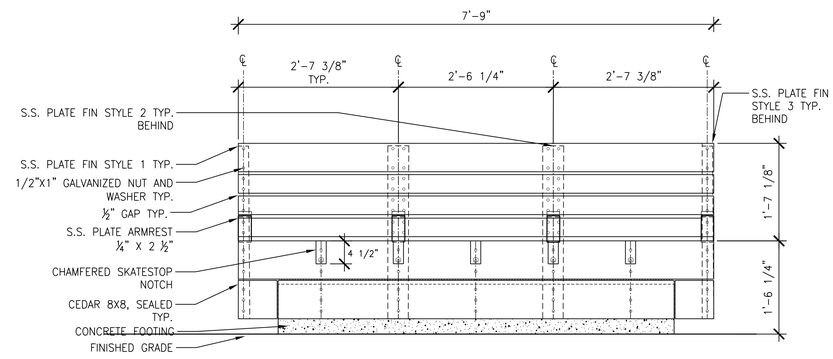

3 WOOD BENCH TYPE B FRONTAL ELEVATION
SCALE: 1" = 1'-0" ELEVATION

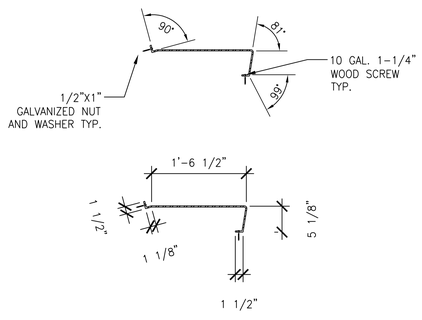

10 WOOD BENCH TYPE B ARM REST
SCALE: 1" = 1'-0" SECTION / PLAN

CITY OF BAINBRIDGE ISLAND
280 MADISON AVE. NORTH
BAINBRIDGE ISLAND, WA 98110

WALKER | MACY

EAGLE HARBOR WATERFRONT PARK
BAINBRIDGE ISLAND, WA

STATE OF WASHINGTON REGISTERED LANDSCAPE ARCHITECT
CHRISTOPHER S. JONES
CERTIFICATE NO. 1371

PROJECT NUMBER:	P3119.01
DRAWN BY: KH	REVIEWED BY: CJ/DO

PHASE:
BID SET

ISSUE DATE:
11/20/2015

REVISIONS:

BENCH DETAILS

L606

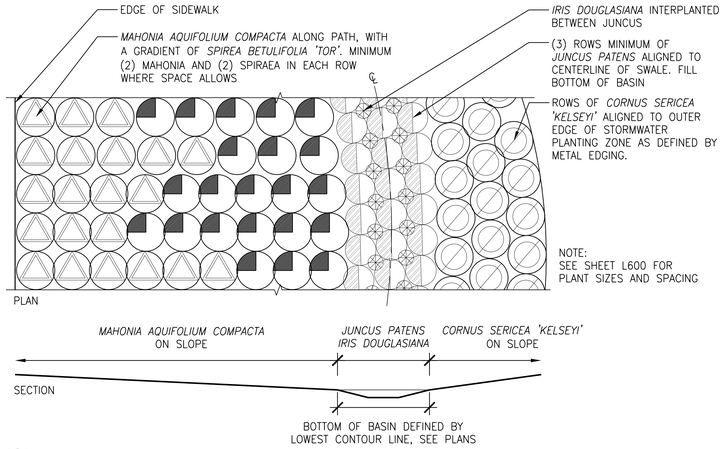

9 STORMWATER PLANTING ENLARGEMENT
SCALE: 1/4" = 1'-0" SECTION

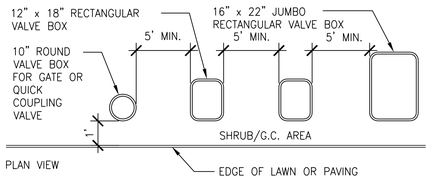

NOTES:

1. CENTER VALVE BOX OVER VALVE
2. SET BOXES 2" ABOVE FINISH GRADE IN GROUND COVER/SHRUB AREA AND FLUSH TO FINISH GRADE IN LAWN AREA.
3. LOCATE RVC AND VALVE BOX ASSEMBLY IN GROUNDCOVER/SHRUB AREA WHERE POSSIBLE. INSTALL IN LAWN ONLY IF GROUNDCOVER DOES NOT EXIST ADJECENT TO LAWN.
4. SET BOXES PARALLEL TO EACH OTHER AND PERPENDICULAR TO EDGE.
5. AVOID HEAVILY COMPACTING SOIL AROUND VALVE BOXES TO PREVENT COLLAPSE AND DEFORMATION OF VALVE BOX SIDES.
6. IDENTIFY VALVE BOX WITH CONTROLLER LETTER AND VALVE NUMBER USING 2" TALL LETTERING.

14 IRRIGATION VALVE BOX LAYOUT
SCALE: 3" = 1'-0" PLAN

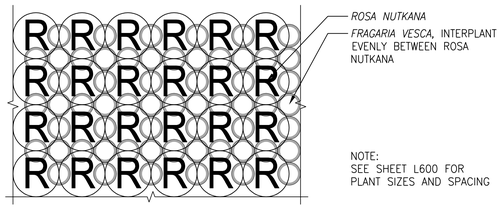

10 SLOPE AREA A PLANTING ENLARGEMENT
SCALE: 1/2" = 1'-0" SECTION

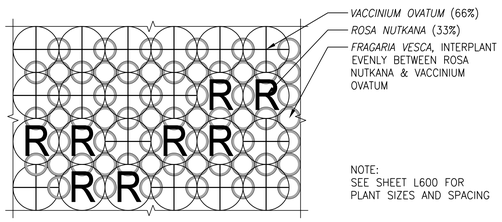

11 SLOPE AREA B PLANTING ENLARGEMENT
SCALE: 1/2" = 1'-0" SECTION

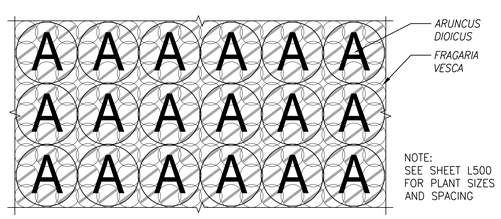

12 WOODLAND AREA B PLANTING ENLARGEMENT
SCALE: 1/2" = 1'-0" PLAN

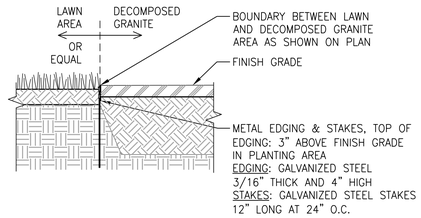

5 STEEL EDGING
SCALE: 3/4" = 1'-0" SECTION

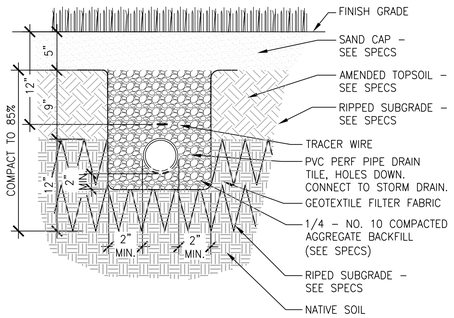

6 SAND CAPPED LAWN
SCALE: 1 1/2" = 1'-0" SECTION

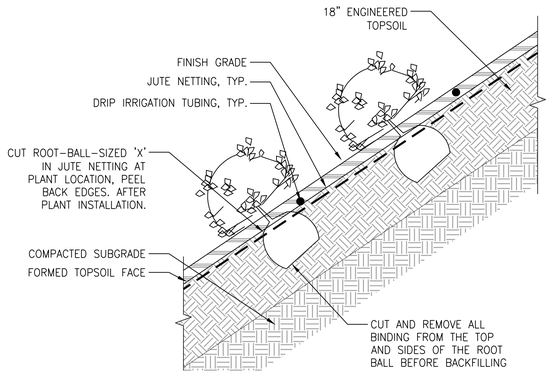

7 SHRUB PLANTING ON SLOPE
SCALE: 3/4" = 1'-0" SECTION

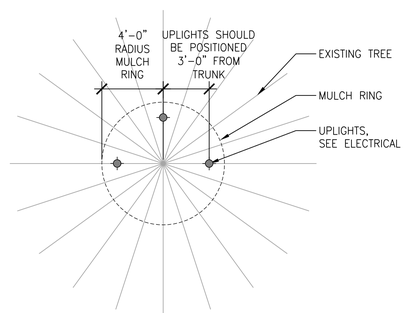

8 TREE UPLIGHT SPACING / MULCH RING
SCALE: 1/4" = 1'-0" PLAN

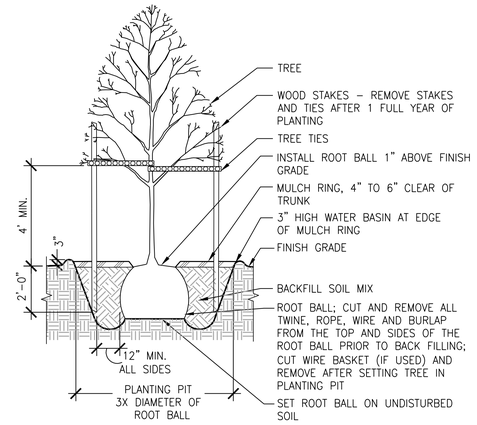

1 DECIDUOUS TREE PLANTING
SCALE: 3/8" = 1'-0" SECTION

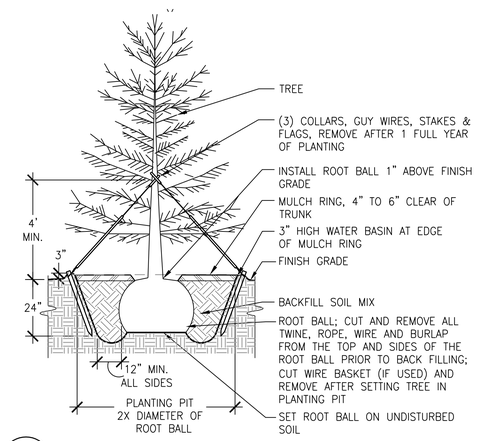

2 CONIFER TREE PLANTING
SCALE: 3/8" = 1'-0" SECTION

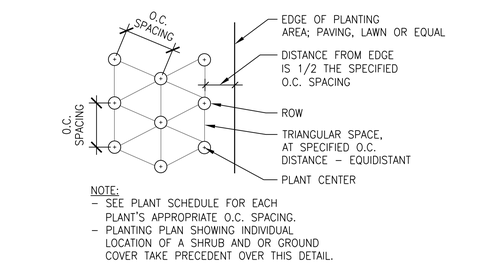

3 SHRUB & GROUNDCOVER TRIANGULAR SPACING
SCALE: 3/4" = 1'-0" SECTION

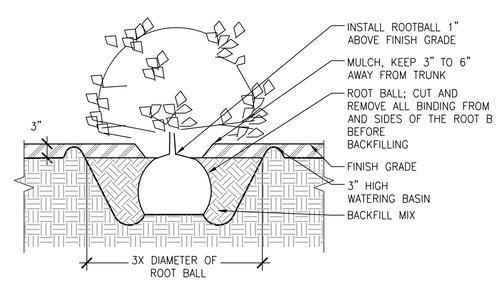

4 SHRUB & GROUNDCOVER PLANTING
SCALE: 3/4" = 1'-0" SECTION

CITY OF BAINBRIDGE ISLAND
280 MADISON AVE. NORTH
BAINBRIDGE ISLAND, WA 98110

WALKER | MACY

EAGLE HARBOR WATERFRONT PARK
BAINBRIDGE ISLAND, WA

STATE OF WASHINGTON REGISTERED LANDSCAPE ARCHITECT
CHRISTOPHER S. JONES
CERTIFICATE NO. 1371

PROJECT NUMBER: P3119.01
DRAWN BY: KH
REVIEWED BY: CJ/DO
PHASE: BID SET
ISSUE DATE: 11/20/2015
REVISIONS:

PLANTING DETAILS

L607

DOOR SCHEDULE

DOOR #	ROOM NAME	OPENING SIZE: W x H	FRAME TYPE	FRAME FIN.	DOOR TYPE	DOOR MAT.	DOOR FIN.	HDWR. SET	REMARKS
100.1	PICNIC PAVILION	8'-0" x 9'-0"	–	–	A	RESIN	MATTE	1	SEE DETAILS FOR MORE INFO.
101.2	PICNIC PAVILION	8'-0" x 9'-0"	–	–	A	RESIN	MATTE	1	SEE DETAILS FOR MORE INFO.
101	ELEC.	3'-4" x 7'-4"	–	–	B	MTL.	PTD.	2	SEE DETAILS FOR MORE INFO.
101	STORAGE	3'-4" x 7'-4"	–	–	B	MTL.	PTD.	2	SEE DETAILS FOR MORE INFO.

HARDWARE SCHEDULE

HARDWARE SET 1			HARDWARE SET 1		
1	EA	CANE BOLT	1	EA	CYLINDER
1	EA	IN-TRACK STOP	1	EA	PERM CORE
1	EA	TRACK	2	EA	GUIDE
2	EA	IN-GRADE GUIDE	1	EA	SILL/BASEPLATE
2	EA	HANGER	1	EA	LOCKSET

DOOR TYPE LEGEND

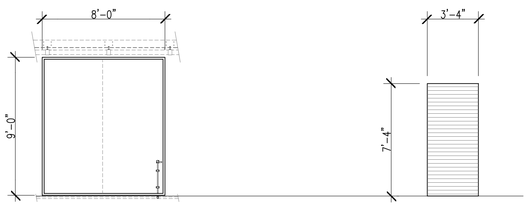

(A) TRANSLUCENT RESIN DOORS

(B) PTD MTL. ROLL UP DOORS

COATINGS SCHEDULE

FINISH #	FINISH TYPE	COLOR/NOTES
P1	EXTERIOR PAINT	TO MATCH SW7020 "BLACK FOX"
P2	TRANSLUCENT EXTERIOR STAIN	COLOR: NATURAL
P3	WOOD END SEAL	CLEAR, COMMERCIAL GRADE, WATER BASED WAX EMULSION SEALER
P4	PENETRATING SEALANT	CLEAR, WATER BASED, LOW VOC, PENETRATING WATER REPELLENT

LIGHTING SCHEDULE

ROOM #	ROOM NAME	FIXTURE COUNT	FIXTURE TYPE	BULB	MATERIAL	ENCLOSURE FINISH
100	PICNIC PAVILION	5	4" IN-GRADE UP LIGHT	LED	–	NATURAL BRASS
101	ELEC.	–	–	–	–	–
102	STORAGE	1	36" LINEAR WALL MOUNT	LED	DIECAST BRASS	BLACK

DRAWING INDEX

ARCHITECTURAL

A0.0 SCHEDULES, ABBREV., SYMBOLS, NOTES
A2.0 FOUNDATION PLAN
A2.1 FLOOR PLAN
A2.2 ROOF PLAN
A2.3 REFLECTED CEILING PLAN
A3.0 NORTH & EAST ELEVATIONS
A3.1 SOUTH & WEST ELEVATIONS
A4.0 BUILDING & WALL SECTIONS
A4.1 BUILDING & WALL SECTIONS
A5.0 REFLECTED CEILING PLAN
A9.0 ROOF & FOUNDATION DETAILS

GENERAL NOTES

1. ALL WORK SHALL BE IN CONFORMANCE WITH APPLICABLE CODES AND LOCAL BUILDING REQUIREMENTS INCLUDING BUT NOT LIMITED TO THE 2012 IBC, 2012 IFC, 2012 IECC.

2. ALL APPLICABLE CODES, ORDINANCES AND MINIMUM STRUCTURAL REQUIREMENTS TAKE PRECEDENCE OVER DRAWINGS AND NOTES.

3. CONTRACTOR SHALL VERIFY ALL DIMENSIONS SHOWN ON THE DRAWINGS BEFORE COMMENCING WITH THE WORK. ANY DISCREPANCIES SHALL BE BROUGHT TO THE ATTENTION OF THE OWNER AND THE ARCHITECT PRIOR TO STARTING ANY CONSTRUCTION OF THE AREA CONCERNED.

4. DIMENSIONS ARE TO FACE OF STRUCTURE, UNLESS NOTED OTHERWISE. DO NOT SCALE DRAWINGS.

5. WHERE ON ANY OF THE DRAWINGS OR DETAILS, A PORTION OF THE WORK IS SHOWN AND/OR DETAILED AND THE REMAINDER INDICATED IN OUTLINE, THE PARTS SHOWN AND/OR DETAILED SHALL APPLY TO ALL OTHER LIKE PORTIONS OF THE WORK.

6. PRIOR TO AND DURING THE WORK, CONTRACTOR SHALL VERIFY CONDITIONS; AND CONDITIONS INCONSISTENT OR PROBLEMATIC WITH REGARD TO THE INTENT OF THE DRAWINGS SHALL BE BROUGHT TO THE ATTENTION OF THE OWNER AND ARCHITECT PRIOR TO STARTING OR CONTINUING WORK IN THE AREA CONCERNED.

8. ALL MATERIALS TO BE ASSUMED AS NEW UNLESS NOTED AS FOIC.

9. ALL WOOD IN CONTACT WITH CONCRETE TO BE PRESSURE TREATED, P.T.

10. CONTRACTOR TO VERIFY LOCATION OF ALL EXISTING UTILITIES THROUGHOUT SITE PRIOR TO EXCAVATION.

ABBREVIATIONS LIST (ABBREV. NOT LIMITED TO THIS LIST)

A.B. ANCHOR BOLT
ADJ. ADJUSTABLE/ADJACENT
A.F.F. ABOVE FINISH FLOOR

BLDG. BUILDING
BLKG. BLOCKING
BOT. BOTTOM
BTWN. BETWEEN
BYD. BEYOND

CL CENTERLINE
CLG. CEILING
CONC. CONCRETE
C.I. CAST IRON
℄ CENTER LINE
C.O. CLEAN OUT
C.W. COLD WATER
CAB. CABINET

CLR. CLEAR
CONST. CONSTRUCTION
CONT. CONTINUOUS
CTR. CENTER

D. DRAIN
DIA. DIAMETER
DWG. DRAWING
D.S. DOWNSPOUT
DTL. DETAIL
DIM. DIMENSION
DN. DOWN
DWR. DRAWER

(E) OR EXIST. EXISTING
E.W. EACH WAY
EA. EACH

ELEC. ELECTRICAL
EXP. EXPANSION/EXPOSED
EXT. EXTERIOR

F.D. FLOOR DRAIN
F.E.C. FIRE EXTINGUISHER CABINET
F.M.C. FLOOR MATERIAL CHANGE
FOIC FURNISHED BY OWNER, INSTALLED BY CONTRACTOR
FOIO FURNISHED BY OWNER INSTALLED BY OWNER
F.O.C. FACE OF CONCRETE
F.O.M. FACE OF MASONRY
F.O.S. FACE OF STUD
FIN. FINISH
FLR. FLOOR

GA. GAUGE
GALV. GALVANIZED

GL GLASS
G.W.B. GYPSUM WALL BOARD

HB. HOSE BIB
HR. HOUR
HT. HEIGHT
H.M. HOLLOW METAL
H.W. HOT WATER
HDR. HEADER
HDWR. HARDWARE

I.D. INSIDE DIAMETER
INSUL. INSULATION
INT. INTERIOR

JT. JOINT

MAX. MAXIMUM
MECH. MECHANICAL
MFR. MANUFACTURER

MIN. MINIMUM
MISC. MISCELLANEOUS
MAT'L MATERIAL
MTL. METAL
MOD. BT. MODIFIED BITUMEN

N.I.C. NOT IN CONTRACT
N.T.S. NOT TO SCALE
NO. OR # NUMBER

O.C. ON CENTER
O.D. OUTSIDE DIAMETER
OPP. OPPOSITE
O/ OVER

PLYD. PLYWOOD
PL PLATE
PLAM PLASTIC LAMINATE
PTD. PAINTED
PV PHOTOVOLTAIC

R. RADIUS
RCP REFLECTED CEILING PLAN
REQD. REQUIRED
R.O. ROUGH OPENING

S.D. SMOKE DETECTOR
S.S. STAINLESS STEEL
SIM. SIMILAR
SQ. SQUARE
STD. STANDARD
STL. STEEL
STRUCT. STRUCTURAL

T.O.C. TOP OF CONCRETE
T.O.M. TOP OF MASONRY
T.O.S. TOP OF SLAB
T.O.S.F. TOP OF SUBFLOOR
TYP. TYPICAL

U.N.O. UNLESS NOTED OTHERWISE

V. VERTICAL
VWP. VENEER WOOD PANEL
VF'Y. VERIFY
V.I.F. VERIFY IN FIELD

WD. WOOD
W/ WITH
W/I WITHIN
W/O WITHOUT
W.C. WATER CLOSET
W.GL. WIRE GLASS
W.M. WIRE MESH
W.P. WATERPROOF
W.W.M. WELDED WIRE MESH
WGWB WATER RESIST. GYPSUM WALL BOARD

SYMBOLS

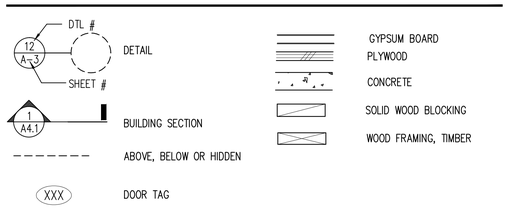

NOT FOR CONSTRUCTION

CITY OF BAINBRIDGE ISLAND
280 MADISON AVE. NORTH
BAINBRIDGE ISLAND, WA 98110

WALKER | MACY

PATANO STUDIO ARCHITECTURE

EAGLE HARBOR WATERFRONT PARK
BAINBRIDGE ISLAND, WA

8425 REGISTERED ARCHITECT
CHRISTOPHER K. PATANO
STATE OF WASHINGTON

PROJECT NUMBER: P3119.01
DRAWN BY:
REVIEWED BY:
PHASE: BID SET
ISSUE DATE: 10/15/2015
REVISIONS:

ADD. ALT. #2

SCHEDULES, ABBREV., SYMBOLS, NOTES

A0.0

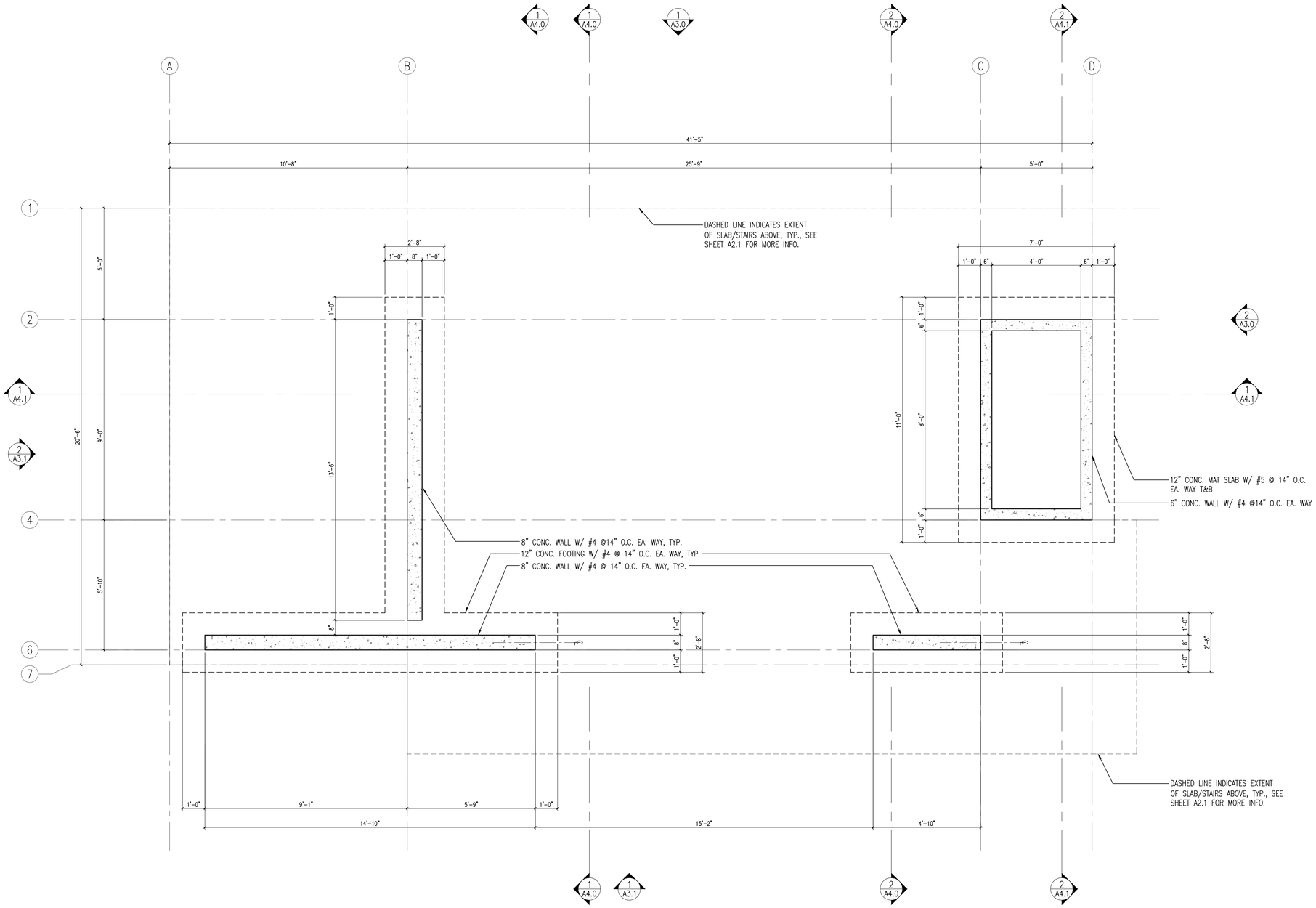

1 FOUNDATION PLAN
SCALE: 1/2" = 1'-0"

NOT FOR CONSTRUCTION

CITY OF BAINBRIDGE ISLAND
280 MADISON AVE. NORTH
BAINBRIDGE ISLAND, WA 98110

WALKER | MACY

PATANO STUDIO ARCHITECTURE

EAGLE HARBOR WATERFRONT PARK
BAINBRIDGE ISLAND, WA

8425
REGISTERED ARCHITECT
CHRISTOPHER K. PATANO
STATE OF WASHINGTON

PROJECT NUMBER: P3119.01
DRAWN BY:
REVIEWED BY:
PHASE: BID SET
ISSUE DATE: 10/15/2015
REVISIONS:

ADD. ALT. #2

FOUNDATION PLAN

A2.0

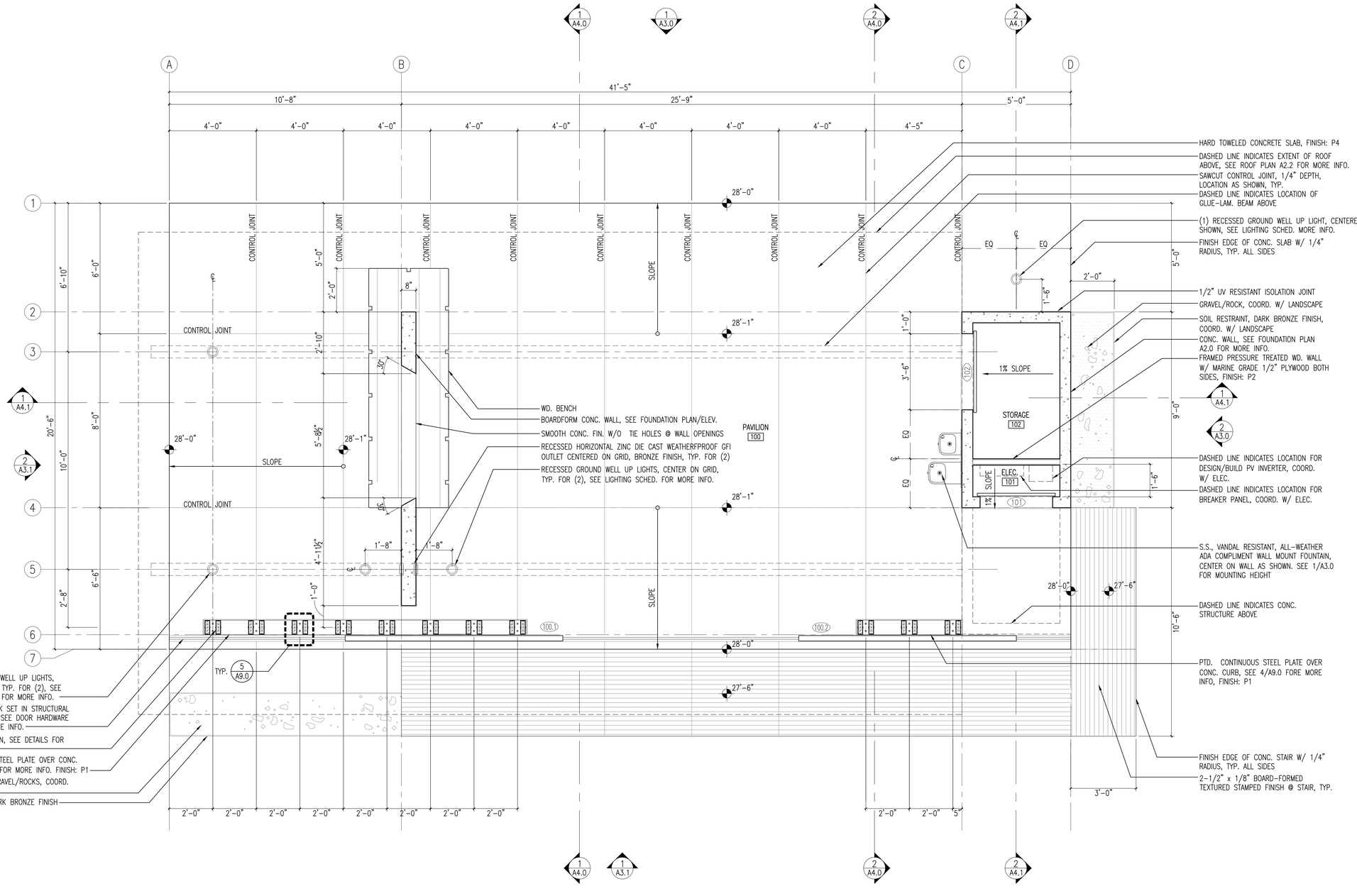

1 FLOOR PLAN
SCALE: 1/2" = 1'-0"

NOT FOR CONSTRUCTION

CITY OF BAINBRIDGE ISLAND
280 MADISON AVE. NORTH
BAINBRIDGE ISLAND, WA 98110

WALKER | MACY

PATANO STUDIO ARCHITECTURE

EAGLE HARBOR WATERFRONT PARK
BAINBRIDGE ISLAND, WA

8425 REGISTERED ARCHITECT
CHRISTOPHER K. PATANO
STATE OF WASHINGTON

PROJECT NUMBER: P3119.01
DRAWN BY:
REVIEWED BY:
PHASE: BID SET
ISSUE DATE: 10/15/2015
REVISIONS:

ADD. ALT. #2

FLOOR PLAN

A2.1

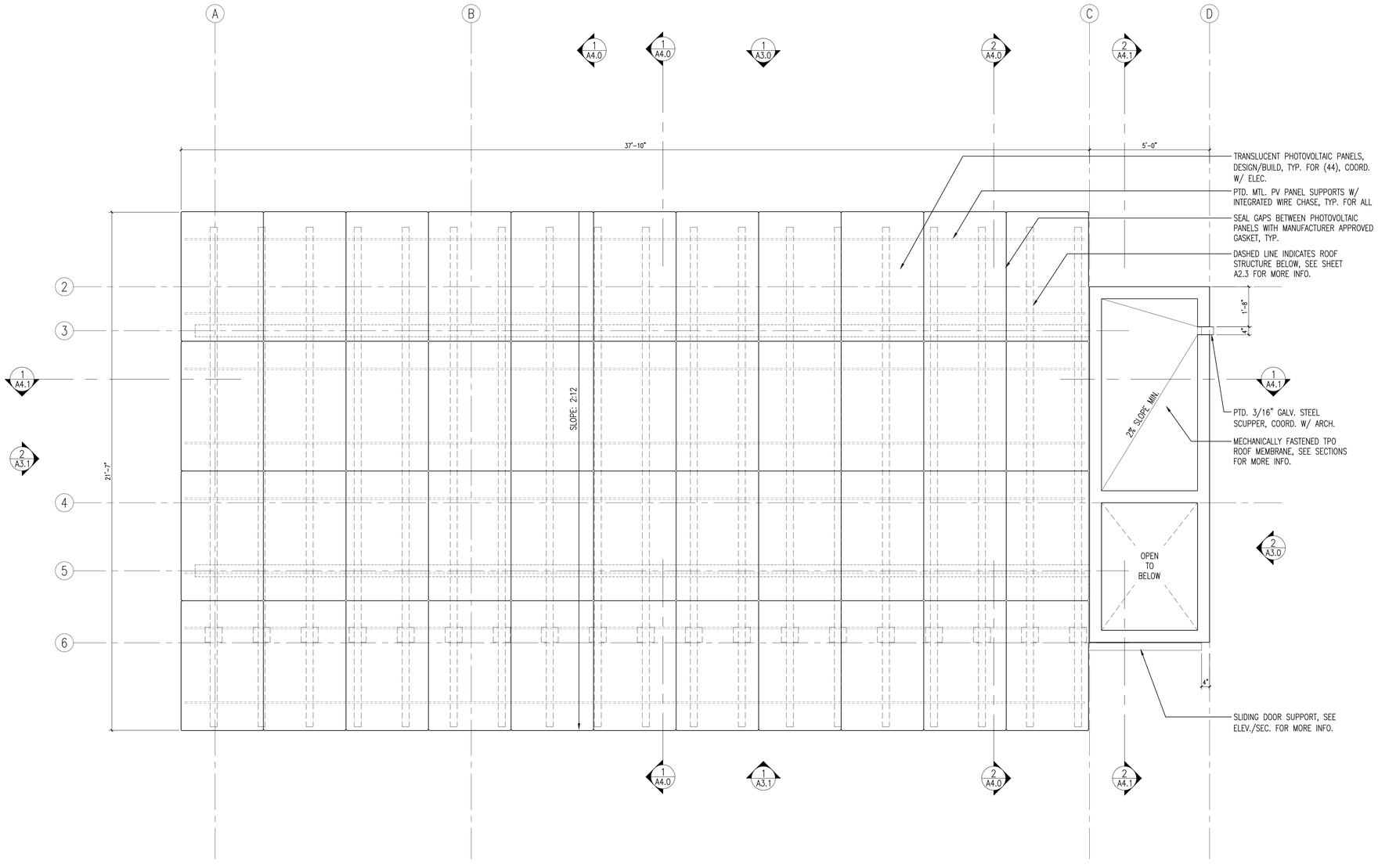

1 ROOF PLAN
SCALE: 1/2" = 1'-0"

NOT FOR CONSTRUCTION

CITY OF BAINBRIDGE ISLAND
280 MADISON AVE. NORTH
BAINBRIDGE ISLAND, WA 98110

WALKER | MACY

PATANO STUDIO ARCHITECTURE

EAGLE HARBOR WATERFRONT PARK
BAINBRIDGE ISLAND, WA

8425
REGISTERED ARCHITECT
CHRISTOPHER K. PATANO
STATE OF WASHINGTON

PROJECT NUMBER: P3119.01
DRAWN BY:
REVIEWED BY:
PHASE: BID SET
ISSUE DATE: 10/15/2015
REVISIONS:

ADD. ALT. #2

ROOF PLAN

A2.2

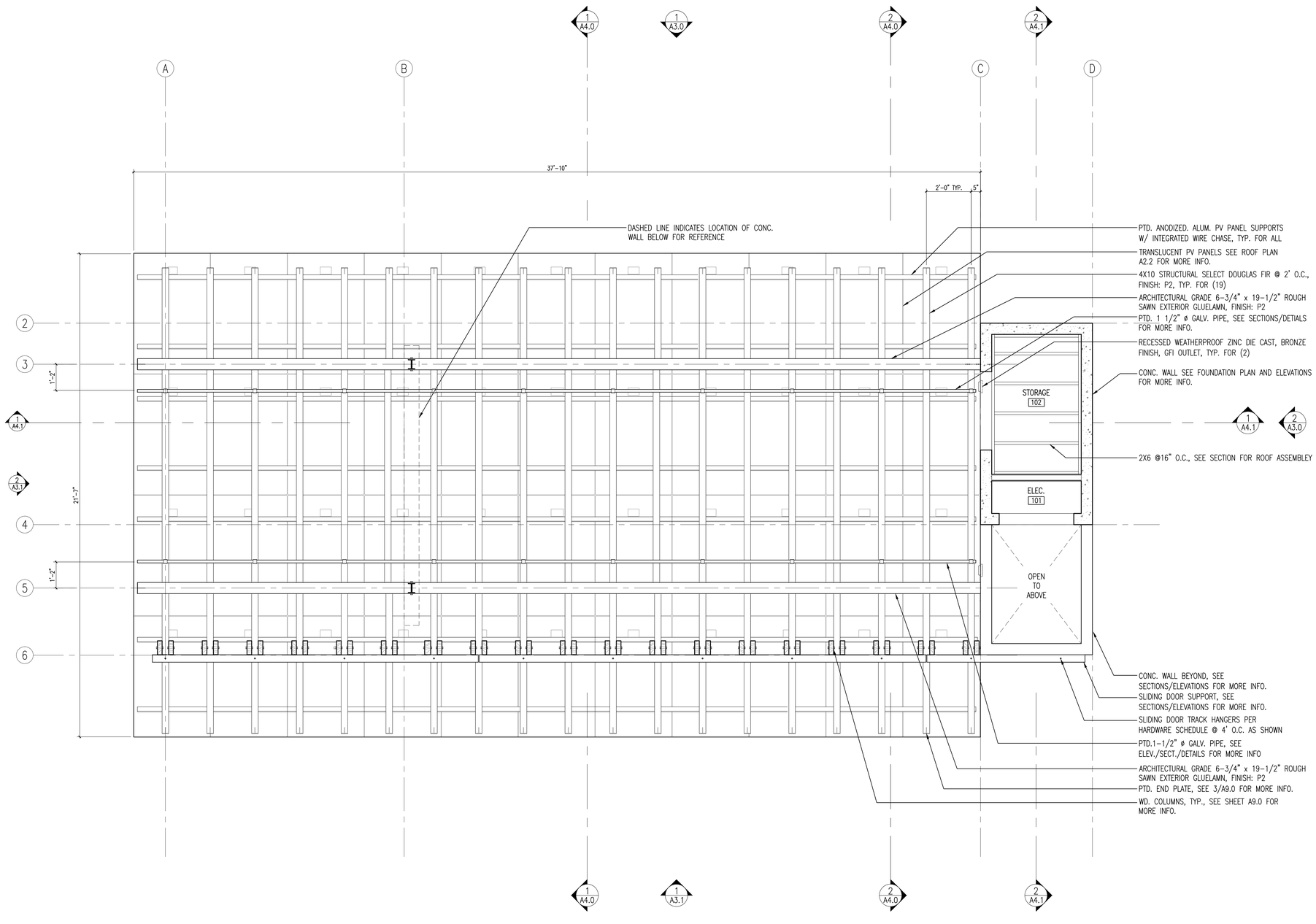

1 REFLECTED CEILING PLAN
SCALE: 1/2" = 1'-0"

NOT FOR CONSTRUCTION

CITY OF BAINBRIDGE ISLAND
280 MADISON AVE. NORTH
BAINBRIDGE ISLAND, WA 98110

WALKER | MACY

PATANO STUDIO ARCHITECTURE

EAGLE HARBOR WATERFRONT PARK
BAINBRIDGE ISLAND, WA

8425 REGISTERED ARCHITECT
CHRISTOPHER K. PATANO
STATE OF WASHINGTON

PROJECT NUMBER: P3119.01
DRAWN BY:
REVIEWED BY:
PHASE: BID SET
ISSUE DATE: 10/15/2015
REVISIONS:

ADD. ALT. #2

REFLECTED CEILING PLAN

A2.3

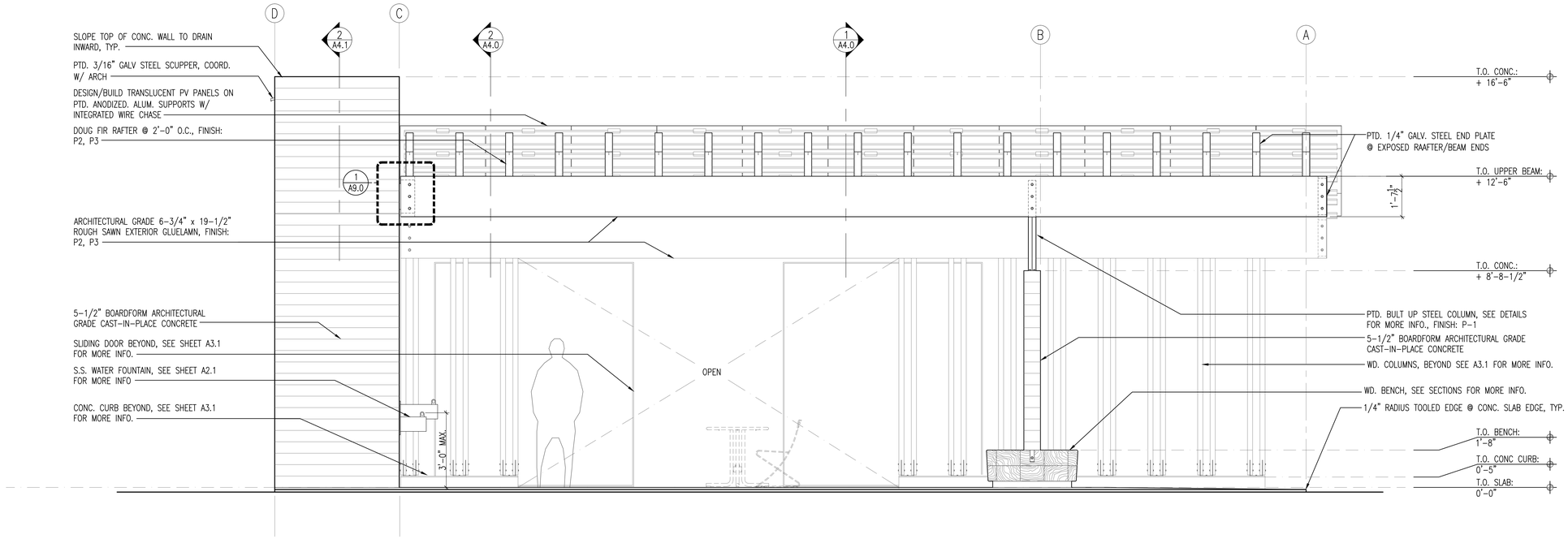

1 NORTH ELEVATION
SCALE: 1/2" = 1'-0"

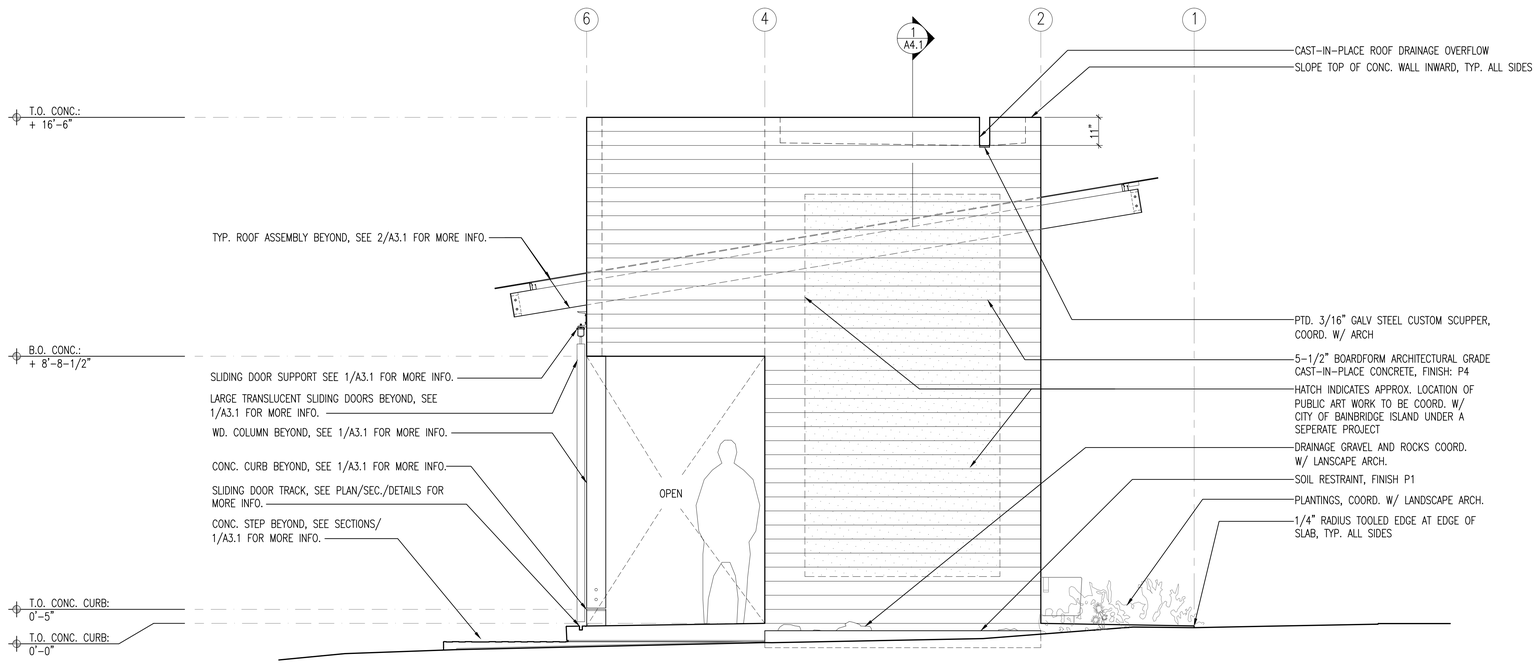

2 EAST ELEVATION
SCALE: 1/2" = 1'-0"

NOT FOR CONSTRUCTION

CITY OF BAINBRIDGE ISLAND
280 MADISON AVE. NORTH
BAINBRIDGE ISLAND, WA 98110

WALKER | MACY

PATANO STUDIO ARCHITECTURE

EAGLE HARBOR WATERFRONT PARK

BAINBRIDGE ISLAND, WA

8425 REGISTERED ARCHITECT
CHRISTOPHER K. PATANO
STATE OF WASHINGTON

PROJECT NUMBER:	P3119.01
DRAWN BY:	REVIEWED BY:
PHASE:	BID SET
ISSUE DATE:	10/15/2015
REVISIONS:	

ADD. ALT. #2

ELEVATIONS

A3.0

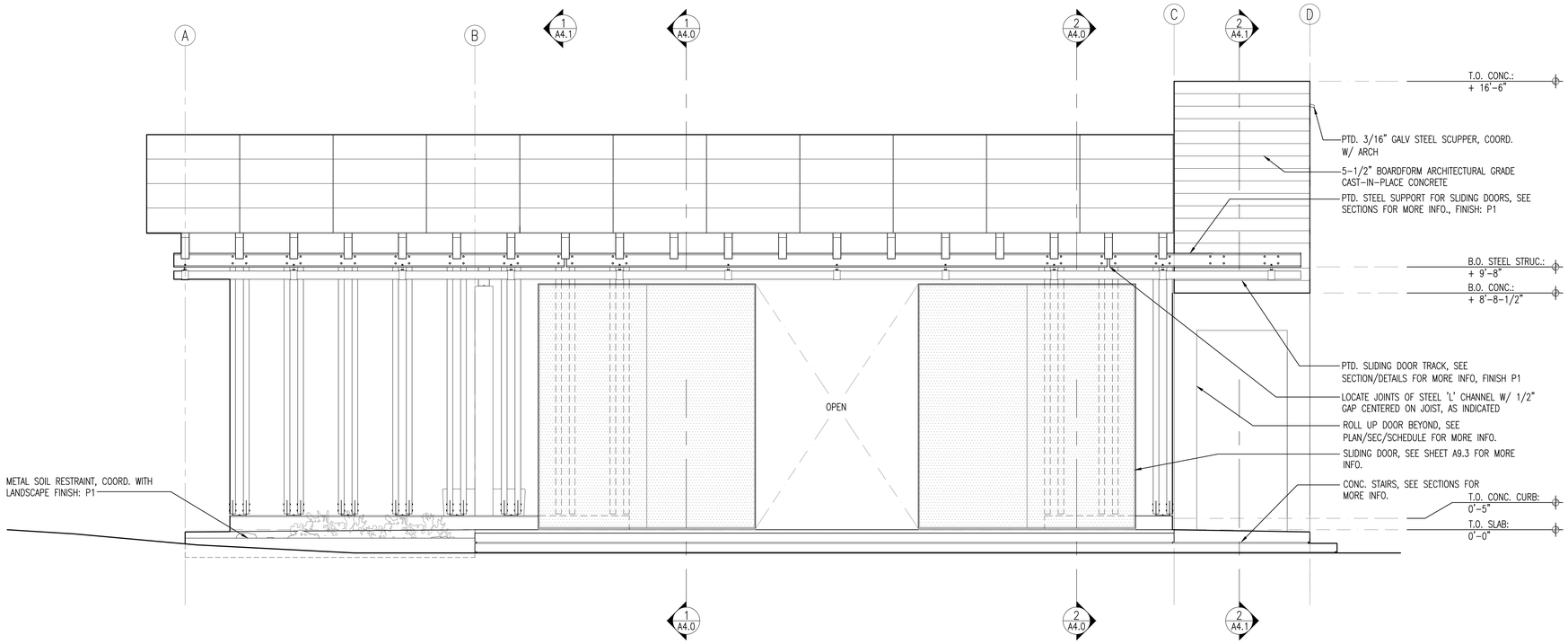

1 SOUTH ELEVATION
SCALE: 1/2" = 1'-0"

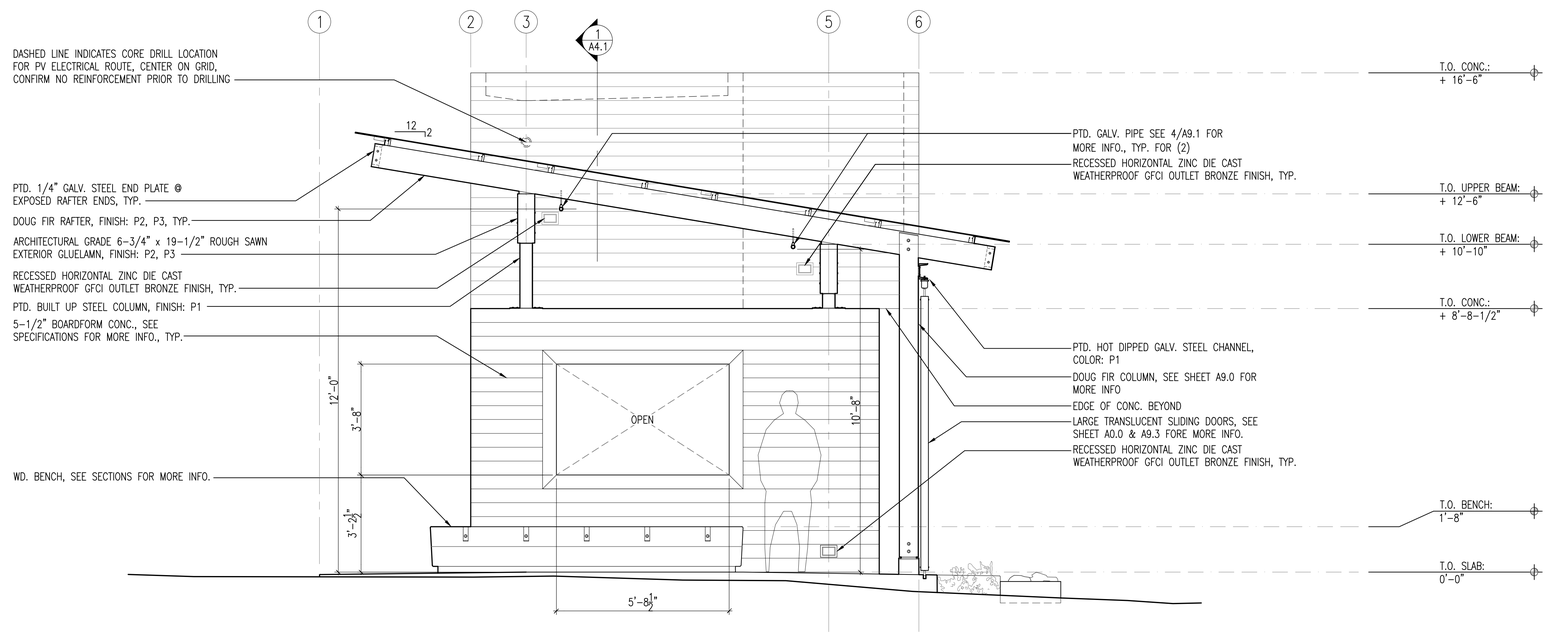

2 WEST ELEVATION
SCALE: 1/2" = 1'-0"

NOT FOR CONSTRUCTION

CITY OF BAINBRIDGE ISLAND
280 MADISON AVE. NORTH
BAINBRIDGE ISLAND, WA 98110

WALKER | MACY

PATANO STUDIO ARCHITECTURE

8425 REGISTERED ARCHITECT CHRISTOPHER K. PATANO STATE OF WASHINGTON

EAGLE HARBOR WATERFRONT PARK

BAINBRIDGE ISLAND, WA

PROJECT NUMBER: P3119.01
DRAWN BY:
REVIEWED BY:
PHASE: BID SET
ISSUE DATE: 10/15/2015
REVISIONS:

ADD. ALT. #2

ELEVATIONS

A3.1

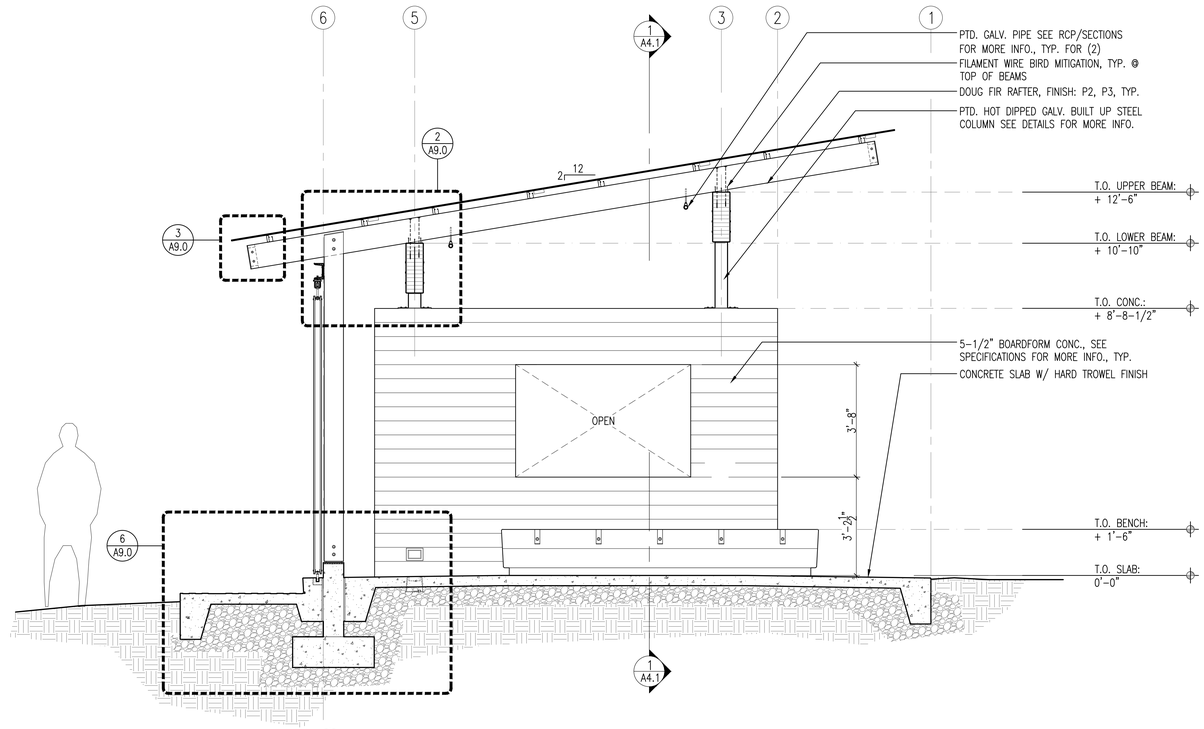

1 SECTION
SCALE: 1/2" = 1'-0"

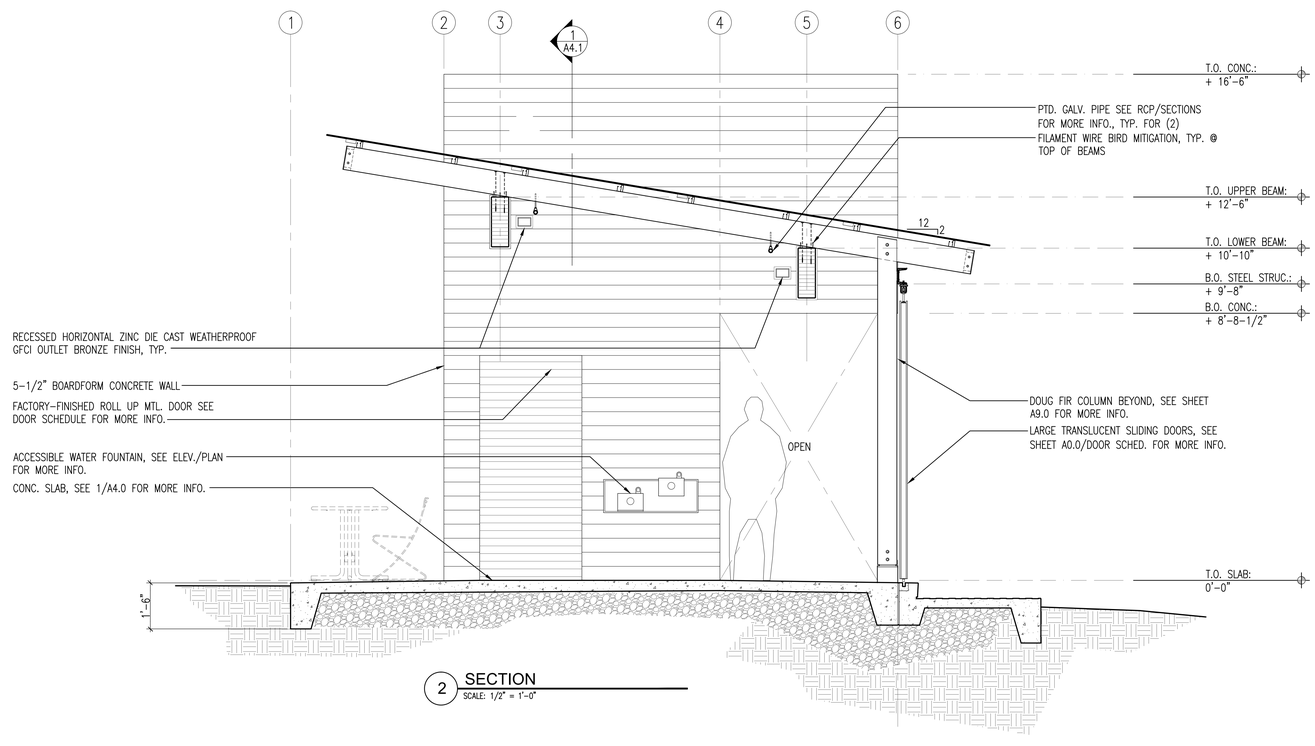

2 SECTION
SCALE: 1/2" = 1'-0"

NOT FOR CONSTRUCTION

CITY OF BAINBRIDGE ISLAND
280 MADISON AVE. NORTH
BAINBRIDGE ISLAND, WA 98110

WALKER | MACY

PATANO STUDIO ARCHITECTURE

EAGLE HARBOR WATERFRONT PARK
BAINBRIDGE ISLAND, WA

8425 REGISTERED ARCHITECT
CHRISTOPHER K. PATANO
STATE OF WASHINGTON

PROJECT NUMBER:	P3119.01
DRAWN BY:	REVIEWED BY:

PHASE:
BID SET

ISSUE DATE:
10/15/2015

REVISIONS:

ADD. ALT. #2
SECTIONS

A4.0

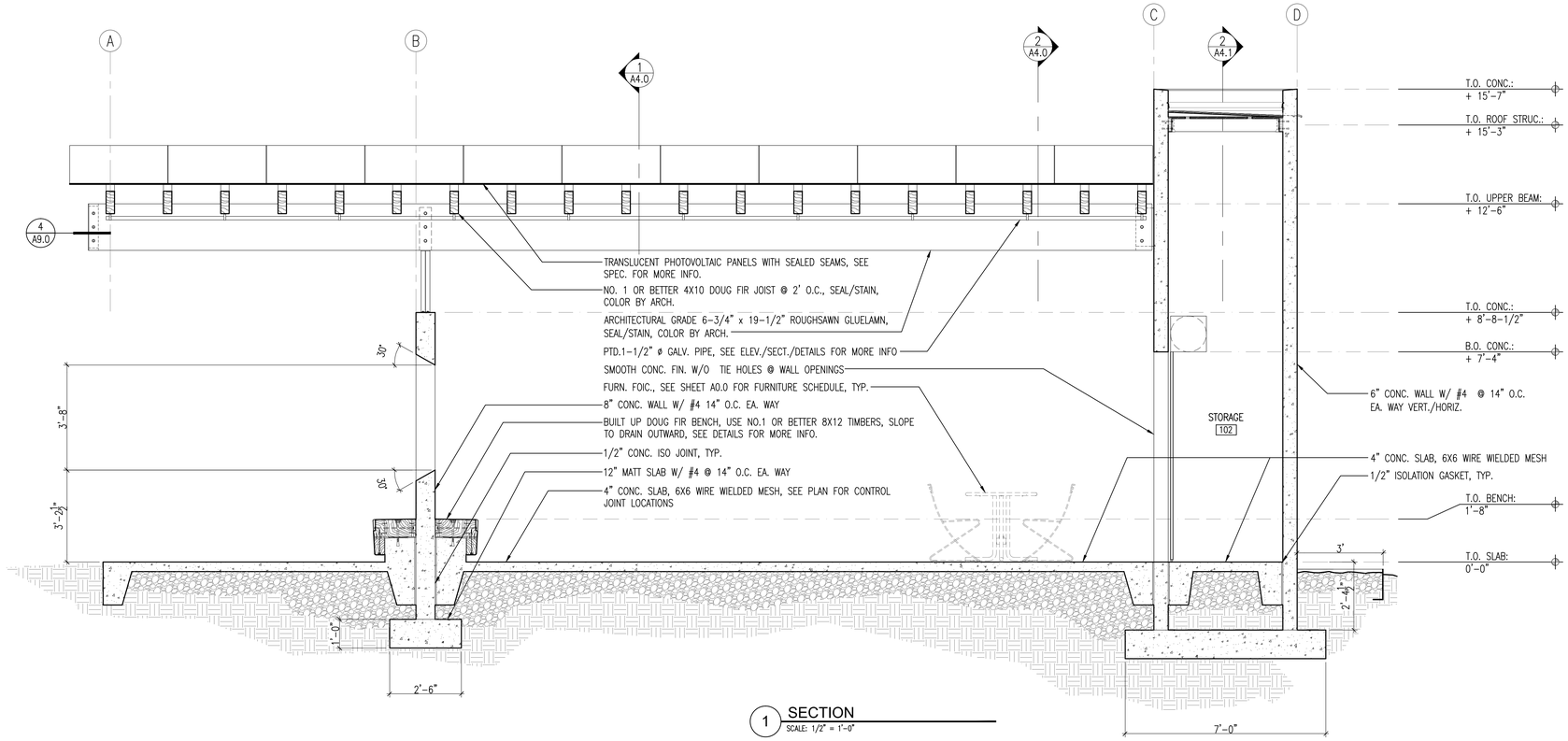

1 SECTION
SCALE: 1/2" = 1'-0"

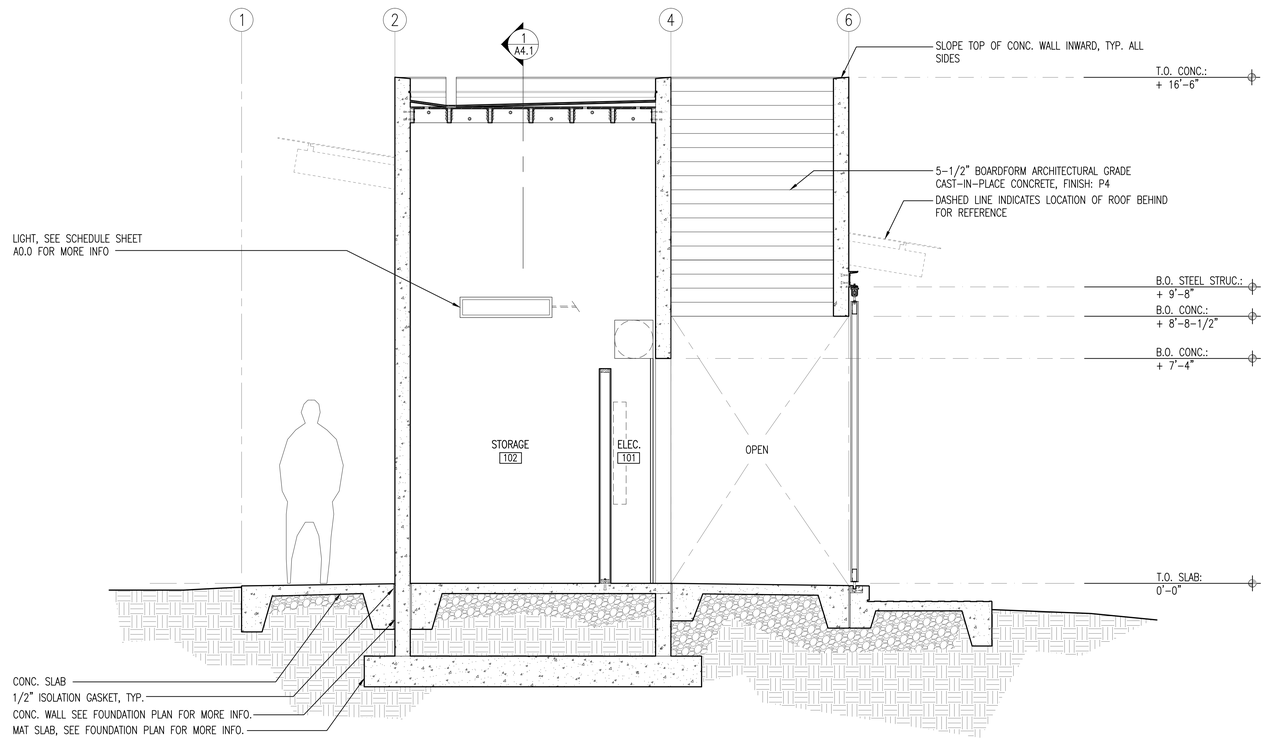

2 SECTION
SCALE: 1/2" = 1'-0"

NOT FOR CONSTRUCTION

CITY OF BAINBRIDGE ISLAND
280 MADISON AVE. NORTH
BAINBRIDGE ISLAND, WA 98110

WALKER | MACY

PATANO STUDIO ARCHITECTURE

EAGLE HARBOR WATERFRONT PARK
BAINBRIDGE ISLAND, WA

8425 REGISTERED ARCHITECT
CHRISTOPHER K. PATANO
STATE OF WASHINGTON

PROJECT NUMBER:	P3119.01
DRAWN BY:	REVIEWED BY:
PHASE: BID SET	
ISSUE DATE: 10/15/2015	
REVISIONS:	

ADD. ALT. #2
SECTIONS

A4.1

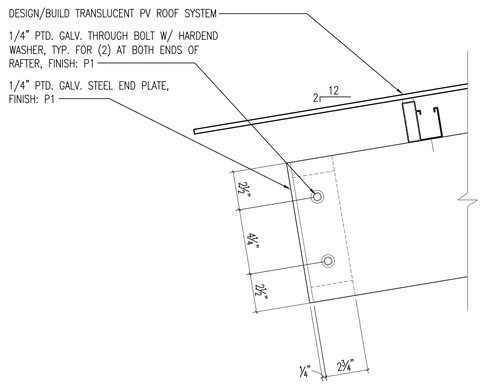

3 DETAIL
SCALE: 3" = 1'-0"

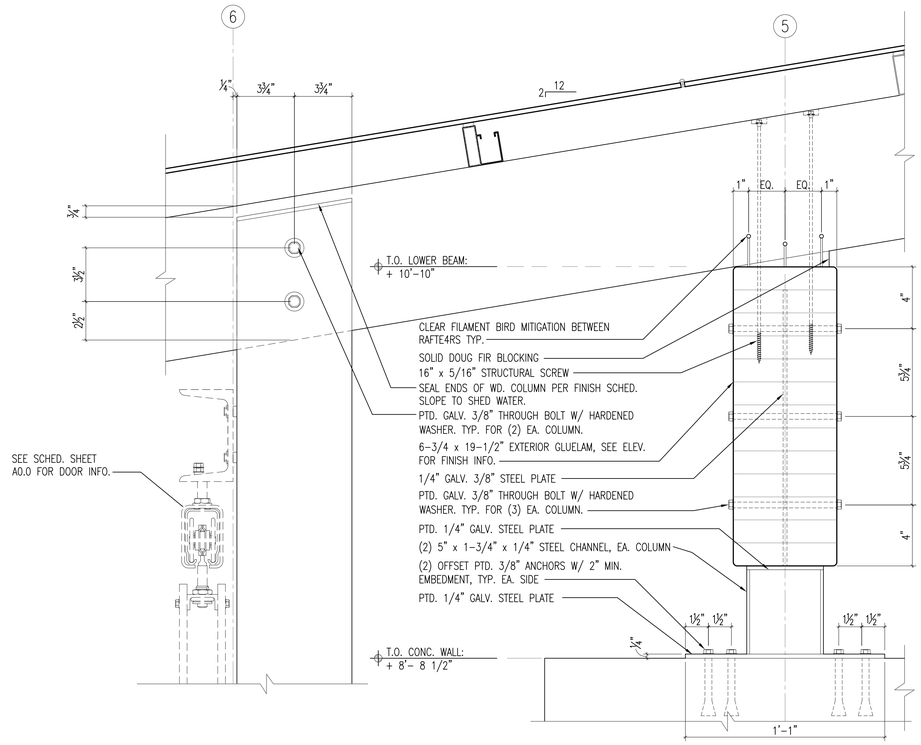

2 DETAIL
SCALE: 3" = 1'-0"

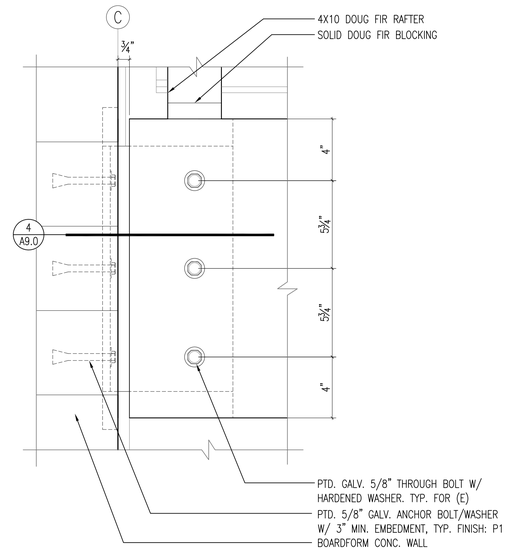

1 DETAIL
SCALE: 3" = 1'-0"

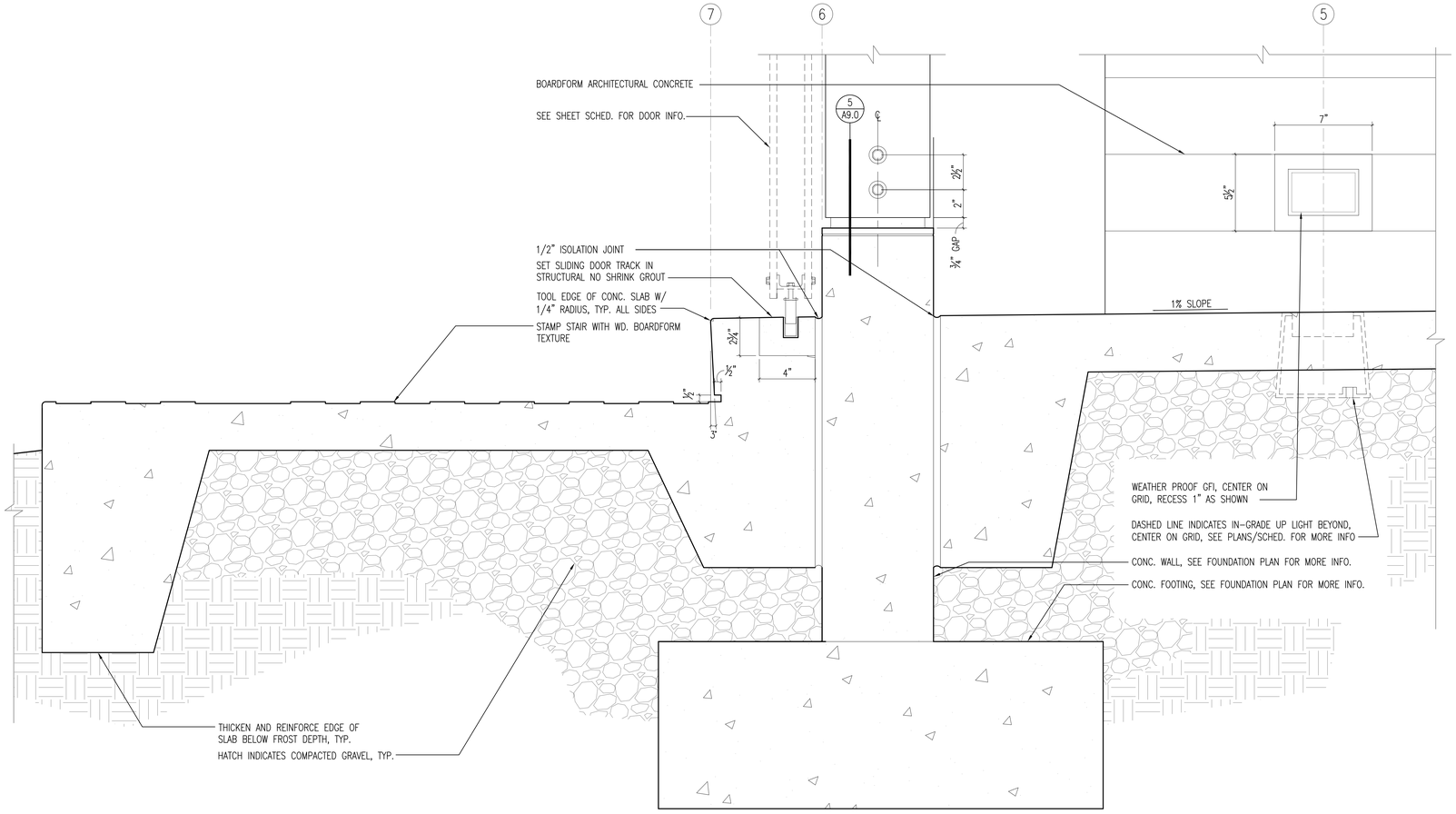

6 DETAIL
SCALE: 3" = 1'-0"

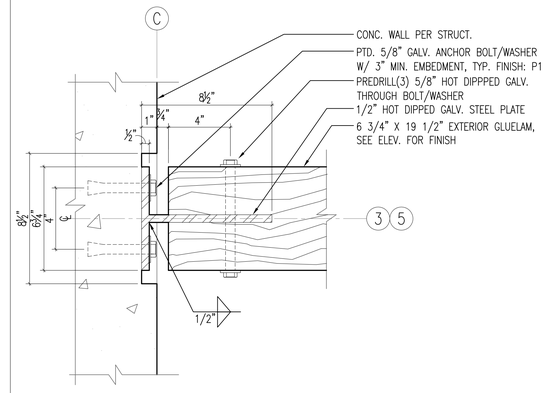

4 DETAIL
SCALE: 3" = 1'-0"

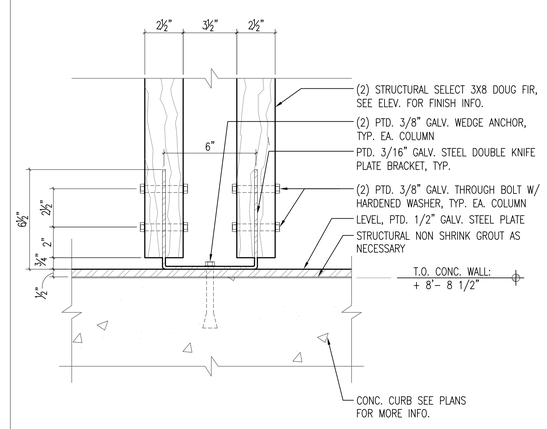

5 DETAIL
SCALE: 3" = 1'-0"

NOT FOR CONSTRUCTION

CITY OF BAINBRIDGE ISLAND
280 MADISON AVE. NORTH
BAINBRIDGE ISLAND, WA 98110

WALKER | MACY

PATANO STUDIO ARCHITECTURE

EAGLE HARBOR WATERFRONT PARK
BAINBRIDGE ISLAND, WA

8425 REGISTERED ARCHITECT
CHRISTOPHER K. PATANO
STATE OF WASHINGTON

PROJECT NUMBER: P3119.01
DRAWN BY:
REVIEWED BY:
PHASE: BID SET
ISSUE DATE: 10/15/2015
REVISIONS:

ADD. ALT. #2
ROOF & FOUNDATION DETAILS

A9.0

ABBREVIATIONS

AFF	ABOVE FINISHED FLOOR	KVA	KILOVOLT AMP
A	AMPERE (AMP)	KVAR	KILOVOLT AMPS REACTIVE
AL	ALUMINUM	LA	LIGHTNING ARRESTOR
ARCH	ARCHITECT / ARCHITECTURAL	LTG	LIGHTING
ATS	AUTOMATIC TRANSFER SWITCH	LV	LOW VOLTAGE
CB	CIRCUIT BREAKER	MATV	MASTER ANTENNA TELEVISION
C	CONDUIT	MCA	MINIMUM CIRCUIT AMPS
CCTV	CLOSED CIRCUIT TELEVISION	MCB	MAIN CIRCUIT BREAKER
CKT	CIRCUIT	MCC	MOTOR CONTROL CENTER
CLG	CEILING	MDP	MAIN DISTRIBUTION PANEL
CT	CURRENT TRANSFORMER	MECH	MECHANICAL
CU	COPPER	MH	METAL HALIDE
DN	DOWN	MLO	MAIN LUGS ONLY
EMERG	EMERGENCY	MV	MERCURY VAPOR
EMT	ELECTRIC METALLIC TUBING	MTS	MANUAL TRANSFER SWITCH
EP	EXPLOSION PROOF	NIC	NOT IN CONTRACT
EPO	EMERGENCY POWER OFF	NL	NIGHT LIGHT CIRCUIT
EWC	ELECTRIC WATER COOLER	PA	PUBLIC ADDRESS
FA	FIRE ALARM	PE	PHOTO ELECTRIC CELL
FLA	FULL LOAD AMPS	PF	POWER FACTOR
FLUOR	FLUORESCENT	PNL	PANELBOARD
FCIC	FURNISHED BY CONTRACTOR INSTALLED BY CONTRACTOR	PVC	POLYVINYL CHLORIDE CONDUIT
		PWR	POWER
FOIC	FURNISHED BY OWNER INSTALLED BY CONTRACTOR	SDP	SUB-DISTRIBUTION PANEL
		STR	STARTER
FOIO	FURNISHED BY OWNER INSTALLED BY OWNER	SV	SOLENOID VALVE
		SW	SWITCH
GFP	GROUND FAULT PROTECTION	TD	TIME DELAY
GFI	GROUND FAULT INTERRUPTER	TP	TAMPERPROOF
GFCI	GROUND FAULT CIRCUIT INTERRUPTER	TTB	TELEPHONE TERMINAL BOARD
GRC	GALVANIZED RIGID CONDUIT	TTC	TELEPHONE TERMINAL CABINET
GRD	GROUND	TV	TELEVISION
HP	HORSEPOWER	TYP	TYPICAL
HPS	HIGH PRESSURE SODIUM	UG	UNDERGROUND
HV	HIGH VOLTAGE	UPS	UNINTERRUPTABLE POWER SUPPLY
HZ	HERTZ	V	VOLTAGE
IG	ISOLATED GROUND	VA	VOLT AMPERES
INC	INCANDESCENT	VP	VAPOR PROOF
JB	JUNCTION BOX	W	WATTS
KW	KILOWATT	WP	WEATHER PROOF
KWH	KILOWATT HOUR	XFMR	TRANSFORMER
KV	KILOVOLT	XFSW	TRANSFER SWITCH

DESIGNATION SYMBOLS

---	123	EQUIPMENT DESIGNATOR SEE SCHEDULE.
E	X	EXISTING TO REMAIN, EXISTING TO BE REMOVED
R	F	EXISTING TO BE RELOCATED, FUTURE
N	C	NEW, CONNECT TO
1		NOTE

POWER

WIRING IN UNDERGROUND CONDUIT
NEW
EXISTING

CABINET

5-20R DUPLEX RECEPTACLE

NOTE

THIS IS A STANDARD LEGEND SHEET, THEREFORE, SOME SYMBOLS MAY APPEAR ON THIS SHEET THAT DO NOT APPEAR ON THE DRAWINGS.

ENERGY CODE COMPLIANCE

COMPLY WITH ALL REQUIREMENTS OF THE 2012 WASHINGTON STATE ENERGY CODE (WSEC).

LIGHTING CONTROLS: REUSE EXISTING PHOTOCELL CONTROLS FOR AUTOMATIC CONTROLS OF PATHWAY LIGHTING.

COMMISSIONING: PROVIDE COMMISSIONING OF ELECTRICAL POWER AND LIGHTING SYSTEMS PER THE REQUIREMENTS OF THE WSEC. COMMISSIONING SHALL INCLUDE TESTING AND PROGRAMMING OF AUTOMATIC CONTROLS TO COMPLY WITH REQUIREMENTS OF WSEC AND USERS.

ELECTRICAL GENERAL NOTES AND SPECIFICATIONS

A. GENERAL REQUIREMENTS:

A.A. REFER ALSO TO DIVISION 01 SPECIFICATIONS FOR ADDITIONAL REQUIREMENTS.

A.B. THE INTENT IS TO PROVIDE A COMPLETE AND WORKABLE PATH LIGHTING SYSTEM AND FESTIVAL POWER CONNECTION PANELS WITH COMPLETE SYSTEMS AS SHOWN, SPECIFIED AND REQUIRED BY APPLICABLE CODES.

A.C. THE COMPLETED INSTALLATION SHALL CONFORM TO ALL APPLICABLE FEDERAL, STATE AND LOCAL CODES, ORDINANCES AND REGULATIONS INCLUDING NECESSARY PERMITS AND INSPECTIONS REQUIRED BY THE GOVERNING AUTHORITIES.

A.D. DO ALL WORK IN A NEAT, WORKMANLIKE, FINISHED AND SAFE MANNER, ACCORDING TO THE LATEST PUBLISHED N.E.C.A. STANDARDS OF INSTALLATION, UNDER COMPETENT SUPERVISION.

B. MATERIALS AND EQUIPMENT:

B.A. ALL MATERIALS SHALL BE NEW AND CURRENTLY MANUFACTURED. ALL MATERIAL SHALL UL LABELED AND MEET ALL INDUSTRY STANDARDS.

B.B. THE USE OF MANUFACTURER'S NAMES, MODELS AND NUMBERS IS INTENDED TO ESTABLISH STYLE, QUALITY, APPEARANCE AND USEFULNESS. PROPOSED SUBSTITUTIONS REQUIRE PRE-BID WRITTEN APPROVAL OF THE ARCHITECT.

B.C. SUBMITTALS:

B.C.A. PRIOR TO CONSTRUCTION: SUBMIT FOR THE ARCHITECT'S APPROVAL A MATERIAL LIST CONTAINING THE MANUFACTURER'S DETAILED SPECIFICATIONS AND DATA SHEETS FOR EQUIPMENT TO BE FURNISHED. SUBMIT IN PDF FORMAT, IN SEPARATE FILES BY SYSTEM, FOR THE FOLLOWING ITEMS OF EQUIPMENT AND SYSTEMS: PANELBOARDS, ENCLOSURES, METER SOCKETS, CIRCUIT BREAKERS, CONDUCTORS, WIRING DEVICES, RACEWAY, AND LUMINAIRES.

B.C.B. AT COMPLETION OF CONSTRUCTION: REFER TO DIVISION 01 SPECIFICATIONS FOR AS-BUILT AND O&M MANUAL REQUIREMENTS.

B.D. GUARANTEE: FURNISH WRITTEN GUARANTEE TO THE OWNER, EFFECTIVE FOR A PERIOD OF ONE YEAR AFTER DATE OF SUBSTANTIAL COMPLETION, COVERING ALL DEFECTS IN CONTRACTOR FURNISHED MATERIALS AND WORKMANSHIP. THE CONTRACTOR SHALL AGREE TO REMEDY ANY DEFECT BY REPLACEMENT OF DEFECTIVE PART WITHOUT ADDITIONAL COST TO OWNER DURING THE PERIOD OF GUARANTEE.

B.E. ALL FINISHES SHALL BE MANUFACTURER'S STANDARD COLOR AS SELECTED BY ARCHITECT.

C. TESTING AND COMMISSIONING:

C.A. LIGHTING & ENERGY CONTROL: PROVIDE COMMISSIONING OF ELECTRICAL POWER AND LIGHTING SYSTEMS PER THE REQUIREMENTS OF THE 2012 WASHINGTON STATE ENERGY CODE. COMMISSIONING SHALL INCLUDE TESTING AND PROGRAMMING OF AUTOMATIC CONTROLS TO COMPLY WITH REQUIREMENTS OF THE WSEC AND OF USERS.

D. DEMOLITION AND CONSTRUCTION – GENERAL:

D.A. PROTECT ALL ELECTRICAL MATERIAL AND EQUIPMENT INSTALLED UNDER THIS DIVISION AGAINST DAMAGE BY OTHER TRADES, WEATHER CONDITIONS OR ANY OTHER CAUSES. EQUIPMENT FOUND DAMAGED OR IN OTHER THAN NEW CONDITION WILL BE REJECTED AND REQUIRE REPLACEMENT.

D.B. KEEP OUTAGES TO OCCUPIED AREAS TO A MINIMUM AND PREARRANGE ALL OUTAGES WITH THE BUILDING'S OWNER. REQUESTS FOR OUTAGES SHALL STATE THE SPECIFIC DATES AND HOURS AND THE MAXIMUM DURATION, WITH THE OUTAGES KEPT TO THESE SPECIFIC TIMES. THIS CONTRACTOR WILL BE LIABLE FOR ANY DAMAGES RESULTING FROM UNSCHEDULED OUTAGES OR FOR THOSE NOT CONFINED TO THE PREAPPROVED TIMES. INCLUDE ALL COSTS FOR OVERTIME LABOR AS NECESSARY TO MAINTAIN ELECTRICAL SERVICES IN THE INITIAL BID PROPOSAL.

D.C. TEMPORARY WIRING AND FACILITIES, IF USED, SHALL BE REMOVED AND THE SITE LEFT CLEAN BEFORE FINAL ACCEPTANCE.

D.D. REMOVE ALL ELECTRICAL WIRING, EQUIPMENT, FIXTURES, ETC., ABANDONED AS A RESULT OF THIS WORK. WIRING WHICH SERVES EXISTING-TO-REMAIN OUTLETS OR FIXTURES SHALL BE RESTORED AT THE COMPLETION OF WORK. REMOVED MATERIALS NOT SCHEDULED FOR REUSE SHALL BECOME THE PROPERTY OF THE CONTRACTOR FOR REMOVAL FROM THE SITE.

D.E. COOPERATE WITH ALL OTHER TRADES FOR PROPER INSTALLATION OF ALL ITEMS OF EQUIPMENT. CONSULT THE DRAWINGS OF ALL OTHER TRADES OR CRAFTS TO AVOID CONFLICTS WITH OTHER TRADES SUCH AS SITE ELEMENTS, SITE FURNITURE, PAVING, ETC. IN GENERAL, THE ARCHITECTURAL DRAWINGS GOVERN BUT CONFLICTS SHALL BE RESOLVED PRIOR TO ROUGH-IN.

D.F. DRILLING OR CUTTING OF EXISTING-TO-REMAIN PAVING: PRIOR TO DRILLING OR CUTTING PAVING OR CONCRETE, MARK LOCATION WITH PAINT AND OBTAIN APPROVAL OF LOCATION FROM ARCHITECT.

D.G. LEAVE THE SITE CLEAN AND READY FOR OCCUPANCY. REMOVE ALL DIRT, DEBRIS, EMPTY CARTONS, TOOLS, CONDUIT AND WIRE SCRAPS AND ALL MISCELLANEOUS SPARE EQUIPMENT AND MATERIALS USED IN THIS DIVISION OF THE WORK DURING CONSTRUCTION. ALL COMPONENTS SHALL BE FREE OF DUST, GRIT AND FOREIGN MATERIALS, LEFT AS NEW BEFORE FINAL ACCEPTANCE OF WORK.

D.H. PROVIDE ENGRAVED EQUIPMENT NAME PLATES ON ALL PANELBOARDS. NAMEPLATE SHALL INDICATE VOLTAGE, AMPERAGE, PHASES, AND LOCATION OF SERVICE.

D.I. PROVIDE ALL SUPPORT HARDWARE AND SYSTEMS FOR ELECTRICAL WORK. SUPPORTS SHALL BE COOPER B-LINE.

E. PANELBOARDS:

E.A. ALL PANELBOARDS SHALL BE SERVICE-ENTRANCE RATED AND HAVE MAIN CIRCUIT BREAKERS RATED FOR USE AS A SERVICE DISCONNECT.

E.B. ALL PANELBOARDS SHALL BE NEMA 4X CONSTRUCTION.

E.C. BRANCH CIRCUIT PROTECTION SHALL BE CIRCUIT BREAKER TYPE. CIRCUIT BREAKERS SHALL BE MOLDED-CASE.

E.D. PANELBOARDS AND BREAKERS SHALL BE SHORT CIRCUIT RATED 10KAIC MINIMUM. PROVIDE LABEL INSIDE DOOR OF EACH PANELBOARD INDICATING AVAILABLE FAULT CURRENT AS REPORTED BY PUGET SOUND ENERGY, AND FAULT CURRENT RATING OF THE PANELBOARD ASSEMBLY.

E.E. PROVIDE NEW CIRCUIT BREAKERS IN EXISTING PANELS. BREAKERS SHALL BE OF SAME BRAND AND AIC RATING AS EXISTING BREAKERS IN PANEL, AND SHALL BE COMPATIBLE WITH PANEL.

E.E.A. IF PANEL IS COMPATIBLE WITH BOTH PLUG-ON AND BOLT-ON BREAKERS, PROVIDE BOLT-ON BREAKERS.

E.F. CIRCUIT BREAKERS USED TO SWITCH LIGHTING CIRCUITS SHALL BE "SWD" RATED.

E.G. PROVIDE NEW, COMPLETE PANEL INDEX FOR EACH PANEL, TYPEWRITTEN ONLY. INDEX SHALL BE SUFFICIENTLY DESCRIPTIVE TO EASILY LOCATE CONTROLLED DEVICES/EQUIPMENT. UPDATE PANEL INDICES AND AS-BUILTS WITH CORRECT CIRCUIT INFORMATION FOR ALL CIRCUITS.

E.H. BALANCE PHASE LOADS SO THAT THEY ARE AS CLOSE TO EQUAL AS POSSIBLE, AND IN ACCORDANCE WITH THE NATIONAL ELECTRICAL CODE.

E.I. PROVIDE ARC FLASH HAZARD STUDY AND PRODUCE ARC FLASH LABELS AS REQUIRED BY NFPA 70E. ARC FLASH HAZARD ANALYSIS SHALL BE PERFORMED ACCORDING TO THE IEEE 1584 EQUATIONS AS PRESENTED IN NFPA 70E. PROVIDE LABEL FOR EACH PANELBOARD, FORMAT AND MOUNTING OF LABEL SHALL COMPLY WITH NFPA 70E.

E.J. ACCEPTABLE MANUFACTURERS: SIEMENS, GE, SQUARE-D, EATON CUTLER-HAMMER, OR APPROVED EQUAL.

F. METER SOCKETS:

F.A. PROVIDE METER SOCKETS IN COMPLIANCE WITH PUGET SOUND ENERGY'S REQUIREMENTS.

F.B. METER SOCKETS SHALL BE NEMA 4X CONSTRUCTION MINIMUM.

F.C. ACCEPTABLE MANUFACTURERS: METER SOCKET SHALL BE OF SAME MANUFACTURER AS PANELBOARDS.

G. ENCLOSURES:

G.A. ENCLOSURES SHALL BE GALVANIZED, CODE-GAUGE FORMED STEEL, NEMA 4X CONSTRUCTION.

G.B. FINISH: MANUFACTURER STANDARD PAINT OR ENAMEL.

H. CONDUIT/RACEWAYS:

H.A. ALL WIRING FOR POWER AND SYSTEMS SHALL BE CONDUCTORS IN CONDUIT.

H.B. CONDUIT SHALL BE CONCEALED IN SLABS OR UNDERGROUND, 12" MINIMUM COVER (EXCEPT 24" WHERE UNDER PARKING LOTS AND DRIVE AISLES).

H.C. CONDUIT SHALL BE SCHED. 80 PVC OR RIGID METAL CONDUIT.

H.D. PAINT ALL EXPOSED CONDUITS, COLOR AS DIRECTED BY ARCHITECT.

H.E. PROVIDE INSULATED CONDUIT BUSHINGS AT EACH END OF EVERY CONDUIT RUN.

I. CONDUCTORS:

I.A. PROVIDE CONDUCTORS FOR ALL CIRCUITING, WIRING, AND SYSTEMS.

I.B. ALL CONDUCTORS SHALL BE SIZED FOR MAXIMUM VOLTAGE DROP OF 3%.

I.B.A. ALL LIGHTING CIRCUIT CONDUCTORS (INCLUDING NEUTRAL AND GROUND) SHALL BE MINIMUM #10.

I.C. CONDUCTORS SHALL BE PROPERLY PHASE AND COLOR CODED:
COLOR CODING: 120/240V

PHASE A	BLACK
PHASE B	RED
NEUTRAL	WHITE
GROUND	GREEN

I.D. UTILIZE CONDUCTORS AND CONNECTORS AS FOLLOWS:

I.D.A. #10 AND SMALLER – SOLID COPPER, THWN COLOR CODED.

I.D.B. #6 AND #8 – STRANDED COPPER THWN COLOR CODED.

I.D.C. TWIST ON TYPE FOR #8 AND SMALLER COPPER CONNECTIONS.

I.D.D. CRIMPED TYPE FOR #4 AND LARGER COPPER CONNECTORS.

I.D.E. COMPLETELY INSULATE EACH CONNECTION, SPLICE AND TERMINATE.

I.D.F. USE OF ALUMINUM (AL) IS STRICTLY PROHIBITED.

I.D.G. MINIMUM CONDUCTOR SIZE SHALL BE #12 AWG WITH THWN INSULATION IN CONDUIT.

I.E. LABEL CIRCUIT ON THE CONDUCTOR AT EACH BOX.

J. GROUNDING:

J.A. INSTALL GROUNDING AS REQUIRED BY THE NATIONAL ELECTRICAL CODE AND PUGET SOUND ENERGY.

J.B. PROVIDE SERVICE GROUNDING ELECTRODE CONDUCTOR AND GROUND ROD AT SERVICE ENTRANCE PANEL. GROUNDING ELECTRODE CONDUCTOR AND GROUND ROD SHALL BE SIZED AS REQUIRED BY THE NATIONAL ELECTRICAL CODE AND PUGET SOUND ENERGY.

J.C. PROVIDE INSULATED GROUND CONDUCTOR IN ALL CONDUITS. CODE-MINIMUM SIZE UNLESS NOTED OTHERWISE.

K. WIRING DEVICES:

K.A. WIRING DEVICES SHALL BE COMPLETE WITH ALL HARDWARE AND COVER PLATES AND SHALL BE GROUNDED TO BOX BY GREEN GROUND WIRE PIGTAIL.

K.B. MOUNTING HEIGHTS ARE NOTED ABOVE FINISHED GRADE, REFER TO ARCHITECTURAL ELEVATIONS.

K.C. ALL RECEPTACLES SHALL BE FLUSH, UNLESS NOTED OTHERWISE.

K.B. DUPLEX: 20 AMPERE, GROUNDED, HEAVY DUTY WEATHER RESISTANT, COMMERCIAL SPECIFICATION GRADE.

K.C. PROVIDE DEDICATED RECEPTACLES FOR ALL EQUIPMENT, ITEMS, AND APPLIANCES.

K.D. ALL DEVICES AND COVER PLATES SHALL BE FINISH AS SELECTED BY ARCHITECT.

L. OUTLET BOXES:

L.A. ATTACH SECURELY TO BUILDING CONSTRUCTION SUPPORT.

L.B. EXPOSED BOXES: CAST TYPE SIMILAR TO HINDS FS.

L.C. ALL OTHERS STAMPED STEEL.

M. LIGHTING:

M.A. LIGHT FIXTURES AND CONTROLS SYSTEMS SHALL BE FURNISHED BY CONTRACTOR, EXCEPT WHERE NOTED AS EXISTING TO BE RELOCATED. CONTRACTOR IS RESPONSIBLE FOR MOUNTING, FINAL CONNECTION, AND PROGRAMMING OF ALL FIXTURES AND LIGHTING CONTROLS, BOTH NEW AND RELOCATED.

M.B. CONTRACTOR IS RESPONSIBLE FOR PROVIDING CORRECT FIXTURE TRIM AND MOUNTING ACCESSORIES FOR SURFACE TYPE IN/ON WHICH EACH FIXTURE IS BEING INSTALLED.

M.C. PROVIDE BALLAST AND DRIVER TYPES AS SHOWN IN FIXTURE SCHEDULE.

M.D. MATCH VOLTAGE OF FIXTURE TO CIRCUIT TO WHICH IT IS SHOWN CONNECTED.

M.E. NARRATIVE DESCRIPTION IN LIGHTING FIXTURE SCHEDULE TAKES PRECEDENCE OVER CATALOG NUMBER.

N. LIGHTING AND ENERGY CONTROLS:

N.A. INTENT IS TO REUSE EXISTING PHOTOCELL LIGHTING CONTROLS.

N.B. PROVIDE ALL LIGHTING AND ENERGY CONTROLS REQUIRED FOR COMPLIANCE WITH 2012 WASHINGTON STATE ENERGY CODE (WSEC).

N.C. REPROGRAM EXISTING CONTROLS AS REQUIRED TO COMPLY WITH ENERGY CODE.

N.D. PROVIDE NEW EQUIPMENT, RELAYS, DEVICES, AND CIRCUITING AS REQUIRED TO COMPLY WITH ENERGY CODE.

N.E. PROVIDE PROGRAMMING AND TESTING OF ALL CONTROLS, BOTH NEW AND REVISED. DEMONSTRATE CONTROLS TO OWNER AND ADJUST PROGRAMMING AS REQUESTED BY OWNER, EXCEPT THAT PROGRAMMING SHALL STILL COMPLY WITH ENERGY CODE.

O. GRID-INTERACTIVE PHOTOVOLTAIC SYSTEM (ADD-ALTERNATE #2, AS DESIGN BUILD)

O.A. THE DESIGN BUILD PV ELECTRICAL SYSTEM SHALL BE COMPLETE WITH LOAD AND SYSTEM CALCULATIONS, LAYOUT, AND SHADING DIAGRAMS, MEETING DESIGN CRITERIA PERFORMED BY OR UNDER THE SUPERVISION OF A PROFESSIONAL ENGINEER LICENSED IN THE STATE OF WASHINGTON. THE DESIGN BUILD CONTRACTOR SHALL BE RESPONSIBLE FOR PROVIDING SEALED CONSTRUCTION AND PERMIT DRAWINGS. DESIGN BUILD CONTRACTOR SHALL HAVE BE CERTIFIED AS A NABCEP ENTRY LEVEL PV INSTALLER (EL) AND HAVE AT LEAST TWO YEARS EXPERIENCE INSTALLING PHOTOVOLTAIC SYSTEMS OF EQUIVALENT SIZE.

O.B. THE PV SYSTEM SHALL CONSIST OF PV MODULES, MOUNTING SYSTEM, AC AND DC DISCONNECTS, METERING, POWER INVERTERS, CONDUCTORS, CONDUIT, WIRE MANAGEMENT, MONITORING DEVICES, OVERCURRENT PROTECTION, AND ALL OTHER ACCESSORIES NEEDED FOR PROPER OPERATION. THE PV SYSTEM MAY ALSO CONSIST OF DISCONNECTING COMBINER BOXES AND WIRING GUTTERS. THE COMPLETE SYSTEM IS TO BE INTEGRATED INTO THE FACILITY ELECTRICAL SYSTEM WITHOUT IMPACT TO THE UTILITY SERVICE OR POWER QUALITY. THE SYSTEM SHALL HAVE A MINIMUM OUTPUT RATING AT THE SERVICE VOLTAGE INDICATED ON THE DRAWINGS. THE PV SYSTEM SHALL BE THE PRODUCT OF A FIRM REGULARLY ENGAGED IN THE ASSEMBLY OR MANUFACTURE OF THIS EQUIPMENT. THE COMPONENT PARTS OF THE SYSTEM SHALL BE THE PRODUCT OF FIRMS REGULARLY ENGAGED IN THE MANUFACTURE OF THESE PARTS.

O.C. CONTRACTOR DESIGN: THE EQUIPMENT SHOWN ON THE CONTRACT DRAWINGS INDICATE THE GENERAL NATURE OF THE PHOTOVOLTAIC SYSTEM, BUT DOES NOT SHOW ALL COMPONENTS REQUIRED. IT IS THE RESPONSIBILITY OF THE CONTRACTOR TO PROVIDE A COMPLETE PHOTOVOLTAIC SYSTEM AS NEEDED TO MEET ALL APPLICABLE CODES AND REQUIREMENTS UNDER THIS SECTION. RACEWAY, ROUTING, AND WIRING FOR FIELD DEVICES ARE NOT SHOWN ON THE DRAWINGS EXCEPT FOR A FEW SPECIFIC DESIGN REQUIREMENTS. ATTACHMENT POINTS OF THE PV SYSTEM TO THE BUILDING STRUCTURE SHALL BE THE RESPONSIBILITY OF THE DESIGN BUILD CONTRACTOR. PROVIDE COORDINATION WITH THE PROJECT ARCHITECT, STRUCTURAL ENGINEER, AND UTILITY. PROVIDE CALCULATIONS AND DETAILS APPROVED BY A REGISTERED STATE OF WASHINGTON STRUCTURAL ENGINEER.

O.D. WARRANTY: THE ELECTRICAL WORK SHALL BE GUARANTEED FOR A PERIOD OF TWO (2) YEARS FOLLOWING DATE OF SUBSTANTIAL COMPLETION. THE PV MODULES SHALL HAVE A MINIMUM 20 YEAR WARRANTY FOR AN OUTPUT OF NOT LESS THAN 80% OF RATED POWER. THE ELECTRONIC COMPONENTS SHALL HAVE A 10 YEAR WARRANTY.

O.E. SUBMITTALS: PROVIDE PRODUCT DATA, SHOP DRAWINGS, SITE TEST REPORT, AND OPERATIONS & MAINTENANCE DATA. SHOP DRAWINGS SHALL INCLUDE A COMPLETE PV SYSTEM DESIGN FOR INSTALLATION BY THE CONTRACTOR, INCLUDING A SINGLE-LINE DIAGRAM, RACEWAY AND CONDUCTOR SIZING, GROUNDING DETAILS, LAYOUT DRAWINGS, VOLTAGE DROP CALCULATIONS, INDIVIDUAL ARRAY EFFICIENCY CALCULATIONS INCLUDING TILT AND ORIENTATION FACTOR, PERCENT SHADING, AND TOTAL SOLAR RESOURCE FRACTION, AND STRUCTURAL CALCULATIONS, DETAILS AND SHOP DRAWINGS FOR THE PV SYSTEM SUPPORT STRUCTURE AND ATTACHMENT TO THE BUILDING WITH A STATE OF WASHINGTON STRUCTURAL ENGINEERS STAMP.

O.F. MODULES: CRYSTAL SILICON CONSTRUCTION WITH THE FOLLOWING EFFICIENCIES (ENCAPSULATED CELL: 18.8%, MODULE: GREATER THAN 14.1%, LESS THAN OR EQUAL TO 67.5VOC). 260W NOMINAL OUTPUT PER MODULEPROVIDE QUICK-CONNECT LEADS. CRYSTALS MOUNTED WITHIN A TEMPERED GLASS ENVELOPE ON CLEAR BACKSHEET. PV MODULES AND SUPPORT STRUCTURE SHALL WITHSTAND WIND LOADS OF 90 MPH FROM ANY DIRECTION. BASIS OF DESIGN: LUMOS LSX. OTHER ACCEPTABLE MANUFACTURERS: SOLARWORLD; SUNPOWER; FIRST SOLAR; SUNTECH; REC; MITUBISHI.

O.G. COMBINER BOXES: PROVIDE DC COMBINER BOXES WITH STRING DISCONNECT AND LIGHTNING PROTECTION. BOXES SHALL BE WEATHERPROOF CONSTRUCTION WITH FUSES FOR INDIVIDUAL MODULE PROTECTION. PROVIDE TERMINALS FOR THE CONNECTION OF INPUT AND OUTPUT CONDUCTORS TO CONNECT THE ARRAYS INDICATED ON PLANS.

O.H. INVERTERS: PROVIDE DC-AC POWER INVERTER COMPATIBLE WITH PV ARRAY AND WITH UTILITY REQUIREMENTS. POWER MODULES TO CONVERT VDC TO 208, 1 PHASE VAC USING A POWER INVERTER AND BE UL 1741 LISTED. UNIT SHALL CONVERT DC SOURCE TO AC WITHOUT A BATTERY STORAGE SYSTEM AND PROVIDE AUTOMATIC MORNING WAKE UP AND EVENING SHUTDOWN (LESS THAN 1 WATT DRAW AT NIGHT OR WHEN OFF). SYSTEM SHALL AUTOMATICALLY SHUT DOWN AND DE-ENERGIZE WHEN UTILITY POWER IS LOST AS REQUIRED BY NEC, UTILITY, AND FIRE DEPATMENT. PROVIDE LCD DISPLAY CAPABE OF SHOWING THE FOLLOWING: PV – INPUT VOLTAGE, PV – DESIRED INPUT VOLTAGE (SET-POINT), CURRENT TO GRID, GRID FREQUENCY, POWER FED TO GRID, GRID IMPEDANCE, PV – VOLTAGE TO EARTH, CURRENT FROM PV-PANELS, ENERGY YIELD, TOTAL OPERATING HOURS, TOTAL SYSTEM START UPS, OPERATION MODE, SYSTEM ERROR. ACCEPTABLE MANUFACTURERS: BASIS OF DESIGN: SMA SUNNYBOY. OTHER ACCEPTABLE MANUFACTURERS: XANTREX; FRONIUS; PV POWERED.

O.I. ELECTRICAL WIRING: ALL POWER WIRING SHALL BE INSTALLED IN CONDUIT. CONDUCTORS SHALL BE SIZED TO KEEP VOLTAGE DROP BELOW 2%. ROUTING OF RACEWAYS BETWEEN PV ARRAYS SHALL BE KEPT CONCEALED AND HIDDEN BEHIND PANEL ASSEMBLIES. ALL ELECTRICAL CONNECTIONS REQUIRED BETWEEN THE VARIOUS ITEMS OF THE SYSTEM SHALL BE PROVIDED RUNG OUT AND TESTED FOR CONTINUITY PRIOR TO ENERGIZING. PROVIDE LABELS FOR ALL MODULE LEADS TO INDICATE NEGATIVE OR POSITIVE.

O.J. SUPERVISION: INSTALLATION AND START-UP SHALL BE SUPERVISED, CHECKED AND TESTED BY A QUALIFIED REPRESENTATIVE OF THE PV SYSTEM MANUFACTURER.

O.K. TESTING: AFTER INSTALLATION AND INITIAL START-UP OF PV SYSTEM IS COMPLETE, TEST SHALL BE PERFORMED AND LOGGED IN THE PRESENCE OF THE ARCHITECT. PV SYSTEM INTEGRATOR SHALL FURNISH AN ENGINEER TO MONITOR THE SYSTEM DURING THE TESTS, TO CHECK ALL DETAILS OF THE INSTALLATION AND TO INSTRUCT THE OPERATORS. ALL COSTS SHALL BE INCLUDED IN THE CONTRACTOR'S BID. THE CONTRACTOR SHALL FURNISH ALL INSTRUMENTS NECESSARY TO CONDUCT THE TESTS AND SHALL CONNECT ALL DEVICES REQUIRED TO OBTAIN DATA REQUIRED. FIELD TEST REQUIREMENTS: DATA SHALL BE RECORDED FOR A 24 HOUR PERIOD. RECORD ALL RESULTS IN THE TEST REPORT. TESTING SHALL BE PERFORMED ON A CLOUDLESS DAY AT NOON FOR MAXIMUM ACCURACY. 1. CHECK OPEN-CIRCUIT VOLTAGE OF EACH OF THE PANELS TO VERIFY THAT IT PROVIDES THE MANUFACTURER'S SPECIFIED VOLTAGE IN FULL SUN. 2. CHECK OPEN-CIRCUIT VOLTAGE OF EACH STRING OF PANELS AT STRING COMBINER. 3. TEST POLARITY OF ALL STRINGS IN THE STRING COMBINER. ALL STRINGS SHOULD HAVE THE SAME POLARITY. 4. TEST THE AC LINE VOLTAGE AT PV SYSTEM AC DISCONNECT(S) TO CONFIRM THAT IT IS WITH 10% OF SYSTEM RATED LINE VOLTAGE. 5. TEST THE CONTINUITY OF ALL DC FUSES TO BE INSTALLED IN THE DC STRING COMBINER BOX. 6. TEST OPEN CIRCUIT VOLTAGE AT DC DISCONNECT SWITCH TO ENSURE IT IS WITHIN PROPER LIMITS ACCORDING TO THE MANUFACTURER'S INSTALLATION MANUAL. 7. TEST TO VERIFY SYSTEM TOLERANCE IS AT 90%. TAKE SIMULTANEOUS MEASUREMENTS FROM CALIBRATED SOLAR METER, PYRANOMETER, AND INVERTER OUTPUT ENERGY OVER A ONE HOUR PERIOD IN 15 MIN INCREMENTS. USE THE FOLLOWING FORMULA TO CALCULATE THE ARRAY TOLERANCE: TOLERANCE = INVERTER ENERGY OUTPUT (WH) / [PYRANOMETER (W/M^2) / 1000 (W/M^2) *0.8] 8. CHECK ISLANDING DISCONNECT FEATURE. 9. UNDER VOLTAGE SHUT-DOWN AND DISCONNECTION. 10. OVER VOLTAGE SHUT-DOWN AND DISCONNECTION. 11. FREQUENCY SHUT-DOWN AND DISCONNECTION. 12. NIGHT TIME SHUT-DOWN. 13. PV ARRAY FAULT CONDITION SHUT-DOWN AND DISCONNECTION.

O.L. ACCEPTANCE: FINAL ACCEPTANCE SHALL BE MADE WHEN THE PV SYSTEM SET HAS SUCCESSFULLY COMPLETED THE ONSITE TESTS AND AFTER ALL DEFECTS IN MATERIAL OR OPERATION HAS BEEN CORRECTED.

O.M. UTILITY: IT IS CONTRACTOR'S RESPONSIBILITY TO ACQUIRE ALL AGREEMENTS AND APPROVALS FROM UTLITY FOR NET METERING OF PV SYSTEM POWER OUTPUT. CONTRACTOR SHALL PROVIDE ALL EQUIPMENT REQUIRED BY THE UTILITY FOR THIS CONNECTION, INCLUDING BUT NOT LIMITED TO METER SOCKET AND ANTI-ISLANDING DISCONNECT.

0 5 10 20 40
SCALE: 1" = 20'-0"
NORTH

CITY OF BAINBRIDGE ISLAND
280 MADISON AVE. NORTH
BAINBRIDGE ISLAND, WA 98110

WALKER | MACY

PAE
Portland | San Francisco | Seattle
pae-engineers.com

EAGLE HARBOR WATERFRONT PARK
BAINBRIDGE ISLAND, WA

NATALIE JO WILKIE
STATE OF WASHINGTON
REGISTERED PROFESSIONAL ENGINEER
11-19-2015

PROJECT NUMBER: P3119.01
DRAWN BY: MAA2
REVIEWED BY: NJW
PHASE: 100% CONSTRUCTION DOCUMENTS
ISSUE DATE: 07/06/2015
REVISIONS:

SYMBOLS, LEGENDS ABBREVIATIONS

E0

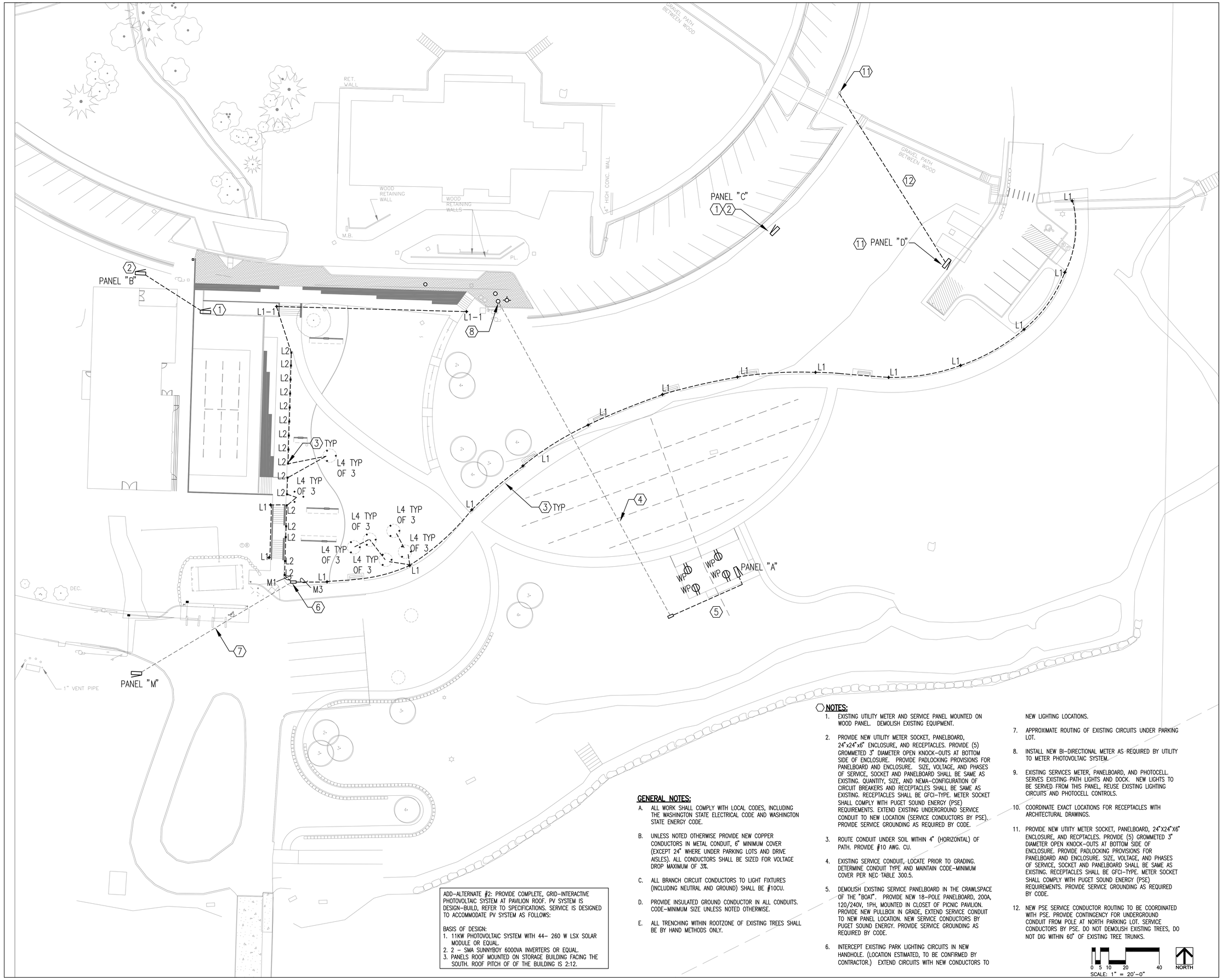

NOTES:

1. EXISTING UTILITY METER AND SERVICE PANEL MOUNTED ON WOOD PANEL. DEMOLISH EXISTING EQUIPMENT.
2. PROVIDE NEW UTILITY METER SOCKET, PANELBOARD, 24"x24"x6" ENCLOSURE, AND RECEPTACLES. PROVIDE (5) GROMMETED 3" DIAMETER OPEN KNOCK-OUTS AT BOTTOM SIDE OF ENCLOSURE. PROVIDE PADLOCKING PROVISIONS FOR PANELBOARD AND ENCLOSURE. SIZE, VOLTAGE, AND PHASES OF SERVICE, SOCKET AND PANELBOARD SHALL BE SAME AS EXISTING. QUANTITY, SIZE, AND NEMA-CONFIGURATION OF CIRCUIT BREAKERS AND RECEPTACLES SHALL BE SAME AS EXISTING. RECEPTACLES SHALL BE GFCI-TYPE. METER SOCKET SHALL COMPLY WITH PUGET SOUND ENERGY (PSE) REQUIREMENTS. EXTEND EXISTING UNDERGROUND SERVICE CONDUIT TO NEW LOCATION (SERVICE CONDUCTORS BY PSE). PROVIDE SERVICE GROUNDING AS REQUIRED BY CODE.
3. ROUTE CONDUIT UNDER SOIL WITHIN 4" (HORIZONTAL) OF PATH. PROVIDE #10 AWG. CU.
4. EXISTING SERVICE CONDUIT, LOCATE PRIOR TO GRADING. DETERMINE CONDUIT TYPE AND MAINTAIN CODE-MINIMUM COVER PER NEC TABLE 300.5.
5. DEMOLISH EXISTING SERVICE PANELBOARD IN THE CRAWLSPACE OF THE "BOAT". PROVIDE NEW 18-POLE PANELBOARD, 200A, 120/240V, 1PH, MOUNTED IN CLOSET OF PICNIC PAVILION. PROVIDE NEW PULLBOX IN GRADE, EXTEND SERVICE CONDUIT TO NEW PANEL LOCATION. NEW SERVICE CONDUCTORS BY PUGET SOUND ENERGY. PROVIDE SERVICE GROUNDING AS REQUIRED BY CODE.
6. INTERCEPT EXISTING PARK LIGHTING CIRCUITS IN NEW HANDHOLE. (LOCATION ESTIMATED, TO BE CONFIRMED BY CONTRACTOR.) EXTEND CIRCUITS WITH NEW CONDUCTORS TO NEW LIGHTING LOCATIONS.
7. APPROXIMATE ROUTING OF EXISTING CIRCUITS UNDER PARKING LOT.
8. INSTALL NEW BI-DIRECTIONAL METER AS REQUIRED BY UTILITY TO METER PHOTOVOLTAIC SYSTEM.
9. EXISTING SERVICES METER, PANELBOARD, AND PHOTOCELL. SERVES EXISTING PATH LIGHTS AND DOCK. NEW LIGHTS TO BE SERVED FROM THIS PANEL, REUSE EXISTING LIGHTING CIRCUITS AND PHOTOCELL CONTROLS.
10. COORDINATE EXACT LOCATIONS FOR RECEPTACLES WITH ARCHITECTURAL DRAWINGS.
11. PROVIDE NEW UTIITY METER SOCKET, PANELBOARD, 24"X24"X6" ENCLOSURE, AND RECPTACLES. PROVIDE (5) GROMMETED 3" DIAMETER OPEN KNOCK-OUTS AT BOTTOM SIDE OF ENCLOSURE. PROVIDE PADLOCKING PROVISIONS FOR PANELBOARD AND ENCLOSURE. SIZE, VOLTAGE, AND PHASES OF SERVICE, SOCKET AND PANELBOARD SHALL BE SAME AS EXISTING. RECEPTACLES SHALL BE GFCI-TYPE. METER SOCKET SHALL COMPLY WITH PUGET SOUND ENERGY (PSE) REQUIREMENTS. PROVIDE SERVICE GROUNDING AS REQUIRED BY CODE.
12. NEW PSE SERVICE CONDUCTOR ROUTING TO BE COORDINATED WITH PSE. PROVIDE CONTINGENCY FOR UNDERGROUND CONDUIT FROM POLE AT NORTH PARKING LOT. SERVICE CONDUCTORS BY PSE. DO NOT DEMOLISH EXISTING TREES, DO NOT DIG WITHIN 60" OF EXISTING TREE TRUNKS.

GENERAL NOTES:

A. ALL WORK SHALL COMPLY WITH LOCAL CODES, INCLUDING THE WASHINGTON STATE ELECTRICAL CODE AND WASHINGTON STATE ENERGY CODE.

B. UNLESS NOTED OTHERWISE PROVIDE NEW COPPER CONDUCTORS IN METAL CONDUIT, 6" MINIMUM COVER (EXCEPT 24" WHERE UNDER PARKING LOTS AND DRIVE AISLES). ALL CONDUCTORS SHALL BE SIZED FOR VOLTAGE DROP MAXIMUM OF 3%.

C. ALL BRANCH CIRCUIT CONDUCTORS TO LIGHT FIXTURES (INCLUDING NEUTRAL AND GROUND) SHALL BE #10CU.

D. PROVIDE INSULATED GROUND CONDUCTOR IN ALL CONDUITS. CODE-MINIMUM SIZE UNLESS NOTED OTHERWISE.

E. ALL TRENCHING WITHIN ROOTZONE OF EXISTING TREES SHALL BE BY HAND METHODS ONLY.

ADD-ALTERNATE #2: PROVIDE COMPLETE, GRID-INTERACTIVE PHOTOVOLTAIC SYSTEM AT PAVILION ROOF. PV SYSTEM IS DESIGN-BUILD, REFER TO SPECIFICATIONS. SERVICE IS DESIGNED TO ACCOMMODATE PV SYSTEM AS FOLLOWS:

BASIS OF DESIGN:
1. 11KW PHOTOVOLTAIC SYSTEM WITH 44- 260 W LSX SOLAR MODULE OR EQUAL.
2. 2 - SMA SUNNYBOY 6000VA INVERTERS OR EQUAL.
3. PANELS ROOF MOUNTED ON STORAGE BUILDING FACING THE SOUTH. ROOF PITCH OF OF THE BUILDING IS 2:12.

0 5 10 20 40
SCALE: 1" = 20'-0"
NORTH

CITY OF BAINBRIDGE ISLAND
280 MADISON AVE. NORTH
BAINBRIDGE ISLAND, WA 98110

WALKER | MACY

PAE
Portland | San Francisco | Seattle
pae-engineers.com

EAGLE HARBOR WATERFRONT PARK

BAINBRIDGE ISLAND, WA

11-19-2015

PROJECT NUMBER:	P3119.01
DRAWN BY: MAA2	REVIEWED BY: NJW

PHASE:
100% CONSTRUCTION DOCUMENTS
ISSUE DATE:
07/06/2015
REVISIONS:

SITE PLAN - ELECTRICAL

E1

PANEL NAME: M
LOCATION: SW LOT
SHORT CIRCUIT RATING: 10,000 AIC
MOUNTING: SURFACE
NEMA RATING: 3R

BUS RATING (AMP): 200 — 1 PHASE
VOLTAGE: 120 / 240 — 3 WIRE
MAIN BKR: 60
FEED: TOP
NUMBER OF POLES: 18

NO.	CIRCUIT DESCRIPTION	CB/PH	KVA	PH	KVA	CB/PH	CIRCUIT DESCRIPTION	NO.
1	PARK LIGHTS (EXISTING BREAKER)	20/1	0.27	A		20/1	SPARE (EXISTING BREAKER)	2
3	PARK LIGHTS (EXISTING BREAKER)	20/1	0.63	B		20/1	SPARE (EXISTING BREAKER)	4
5	LIGHT CONTROLS (EXISTING BREAKER)	20/1	0.10	A	2.88	60/2	DOCK (EXISTING BREAKER)	6
7	SPARE (EXISTING BREAKER)	20/1		B	2.88	"	"	8
9				A				10
11				B				12
13				A				14
15				B				16
17				A				18

LOAD	CON LD (KVA)	DEM FCT (%)	DEM LD (KVA)
SUB FEED		100%	
LIGHTING	0.90	125%	1.12
RECEPT <10KVA		100%	
RECEPT >10KVA		50%	
MOTORS ALL		100%	
LARGEST		25%	
HEATING			
COOLING			
KITCHEN		100%	
MISC. & COMP	5.86	100%	5.86
MISC CONT.		125%	

KVA/PHASE A: 3.25 — CONNECTED LOAD IN KVA: 7
KVA/PHASE B: 3.51 — DEMAND LOAD IN KVA: 7
MAXIMUM AMPS PER PHASE: 29

SPECIAL INSTRUCTIONS:
NOTE:
EXISTING PANEL AND BREAKERS TO REMAIN.

PANEL NAME: A
LOCATION: SOUTH FIELD
SHORT CIRCUIT RATING: 10,000 AIC
MOUNTING: SURFACE
NEMA RATING: 4X

BUS RATING (AMP): 225 — 1 PHASE
VOLTAGE: 120 / 240 — 3 WIRE
MAIN BKR: ##
FEED: BOTTOM
NUMBER OF POLES: 18

NO.	CIRCUIT DESCRIPTION	CB/PH	KVA	PH	KVA	CB/PH	CIRCUIT DESCRIPTION	NO.
1	PICNIC SHELTER RECEPT	20/1	0.18	A				2
3	SPARE	20/1		B				4
5	SPARE	20/1		A				6
7	SPARE	20/1		B				8
9				A				10
11				B				12
13				A				14
15				B		70/2	FUTURE PV SYSTEM (SEE NOTE 1)	16
17				A		"	"	18

LOAD	CON LD (KVA)	DEM FCT (%)	DEM LD (KVA)
SUB FEED		100%	
LIGHTING		125%	
RECEPT <10KVA	0.18	100%	0.18
RECEPT >10KVA		50%	
MOTORS ALL		100%	
LARGEST		25%	
HEATING			
COOLING			
KITCHEN		100%	
MISC. & COMP		100%	
MISC CONT.		125%	

KVA/PHASE A: 0.18 — CONNECTED LOAD IN KVA: 0
KVA/PHASE B: — DEMAND LOAD IN KVA: 0
MAXIMUM AMPS PER PHASE: 2

SPECIAL INSTRUCTIONS:
NOTE: 1. PANEL DESIGNED FOR FUTURE PHOTOVOLTAIC SYSTEM,
MAXIMUM PHOTOVOLTAIC SIZE 11KW. PV SYSTEM DESIGNED BY OTHERS.

xr

PANEL NAME: B
LOCATION: W FESTIVAL POWER
SHORT CIRCUIT RATING: 10,000 AIC
MOUNTING: SURFACE
NEMA RATING: 4X

BUS RATING (AMP): 200 — 1 PHASE
VOLTAGE: 120 / 240 — 3 WIRE
MAIN BKR: ##
FEED: BOTTOM
NUMBER OF POLES: 18

NO.	CIRCUIT DESCRIPTION	CB/PH	KVA	PH	KVA	CB/PH	CIRCUIT DESCRIPTION	NO.
1	FESTIVAL POWER RECEPT	20/2	0.18	A	0.18	20/2	FESTIVAL POWER RECEPT	2
3	FESTIVAL POWER RECEPT		0.18	B	0.18		FESTIVAL POWER RECEPT	4
5	FESTIVAL POWER RECEPT	20/2	0.18	A	0.18	20/2	FESTIVAL POWER RECEPT	6
7	FESTIVAL POWER RECEPT		0.18	B	0.18		FESTIVAL POWER RECEPT	8
9	FESTIVAL POWER RECEPT	20/2	0.18	A				10
11	FESTIVAL POWER RECEPT		0.18	B				12
13	SPARE	20/1		A				14
15	SPARE	20/1		B				16
17	SPARE	20/1		A				18

LOAD	CON LD (KVA)	DEM FCT (%)	DEM LD (KVA)
SUB FEED		100%	
LIGHTING		125%	
RECEPT <10KVA	1.80	100%	1.80
RECEPT >10KVA		50%	
MOTORS ALL		100%	
LARGEST		25%	
HEATING			
COOLING			
KITCHEN		100%	
MISC. & COMP		100%	
MISC CONT.		125%	

KVA/PHASE A: 0.90 — CONNECTED LOAD IN KVA: 2
KVA/PHASE B: 0.90 — DEMAND LOAD IN KVA: 2
MAXIMUM AMPS PER PHASE: 8

SPECIAL INSTRUCTIONS:
NOTE:

PANEL NAME: C
LOCATION: E FESTIVAL POWER
SHORT CIRCUIT RATING: 10,000 AIC
MOUNTING: SURFACE
NEMA RATING: 4X

BUS RATING (AMP): 200 — 1 PHASE
VOLTAGE: 120 / 240 — 3 WIRE
MAIN BKR: ##
FEED: BOTTOM
NUMBER OF POLES: 18

NO.	CIRCUIT DESCRIPTION	CB/PH	KVA	PH	KVA	CB/PH	CIRCUIT DESCRIPTION	NO.
1	FESTIVAL POWER RECEPT	20/2	0.18	A	0.18	20/2	FESTIVAL POWER RECEPT	2
3	FESTIVAL POWER RECEPT		0.18	B	0.18		FESTIVAL POWER RECEPT	4
5	FESTIVAL POWER RECEPT	20/2	0.18	A	0.18	20/2	FESTIVAL POWER RECEPT	6
7	FESTIVAL POWER RECEPT		0.18	B	0.18		FESTIVAL POWER RECEPT	8
9	FESTIVAL POWER RECEPT	20/2	0.18	A				10
11	FESTIVAL POWER RECEPT		0.18	B				12
13	SPARE	20/1		A				14
15	SPARE	20/1		B				16
17	SPARE	20/1		A				18

LOAD	CON LD (KVA)	DEM FCT (%)	DEM LD (KVA)
SUB FEED		100%	
LIGHTING		125%	
RECEPT <10KVA	1.80	100%	1.80
RECEPT >10KVA		50%	
MOTORS ALL		100%	
LARGEST		25%	
HEATING			
COOLING			
KITCHEN		100%	
MISC. & COMP		100%	
MISC CONT.		125%	

KVA/PHASE A: 0.90 — CONNECTED LOAD IN KVA: 2
KVA/PHASE B: 0.90 — DEMAND LOAD IN KVA: 2
MAXIMUM AMPS PER PHASE: 8

SPECIAL INSTRUCTIONS:
NOTE:

0 5 10 20 40
SCALE: 1" = 20'-0"
NORTH

CITY OF BAINBRIDGE ISLAND
280 MADISON AVE. NORTH
BAINBRIDGE ISLAND, WA 98110

WALKER | MACY

PAE
Portland I San Francisco I Seattle
pae-engineers.com

EAGLE HARBOR WATERFRONT PARK
BAINBRIDGE ISLAND, WA

11-19-2015

PROJECT NUMBER: P3119.01
DRAWN BY: NJW — REVIEWED BY: NJW
PHASE: 100% CONSTRUCTION DOCUMENTS
ISSUE DATE: 07/06/2015
REVISIONS:

PANEL SCHEDULES & CALCULATIONS

E2

PANEL NAME:	**D**	BUS RATING (AMP): 200	1 PHASE
LOCATION:	SE FESTIVAL POWER	VOLTAGE: 120 / 240	3 WIRE
SHORT CIRCUIT RATING:	10,000 AIC	MAIN BKR: ##	
MOUNTING:	SURFACE	FEED: BOTTOM	
NEMA RATING:	4X	NUMBER OF POLES: 18	

NO.	CIRCUIT DESCRIPTION	CB/PH	KVA	PH	KVA	CB/PH	CIRCUIT DESCRIPTION	NO.
1	FESTIVAL POWER RECEPT	20/2	0.18	A	0.18	20/2	FESTIVAL POWER RECEPT	2
3	FESTIVAL POWER RECEPT		0.18	B	0.18		FESTIVAL POWER RECEPT	4
5	FESTIVAL POWER RECEPT	20/2	0.18	A	0.18	20/2	FESTIVAL POWER RECEPT	6
7	FESTIVAL POWER RECEPT		0.18	B	0.18		FESTIVAL POWER RECEPT	8
9	FESTIVAL POWER RECEPT	20/2	0.18	A				10
11	FESTIVAL POWER RECEPT		0.18	B				12
13	SPARE	20/1		A				14
15	SPARE	20/1		B				16
17	SPARE	20/1		A				18

LOAD	CON LD (KVA)	DEM FCT (%)	DEM LD (KVA)
SUB FEED		100%	
LIGHTING		125%	
RECEPT <10KVA	1.80	100%	1.80
RECEPT >10KVA		50%	
MOTORS ALL		100%	
LARGEST		25%	
HEATING			
COOLING			
KITCHEN		100%	
MISC. & COMP		100%	
MISC CONT.		125%	

KVA/PHASE A:	0.90	CONNECTED LOAD IN KVA:	2
KVA/PHASE B:	0.90	DEMAND LOAD IN KVA:	2
		MAXIMUM AMPS PER PHASE:	8

SPECIAL INSTRUCTIONS:

NOTE:

0 5 10 20 40

SCALE: 1" = 20'-0"

NORTH

CITY OF BAINBRIDGE ISLAND

280 MADISON AVE. NORTH
BAINBRIDGE ISLAND, WA 98110

WALKER | MACY

PAE
Portland | San Francisco | Seattle
pae-engineers.com

EAGLE HARBOR WATERFRONT PARK

BAINBRIDGE ISLAND, WA

11-19-2015

PROJECT NUMBER: P3119.01

DRAWN BY: NJW | REVIEWED BY: NJW

PHASE:
100% CONSTRUCTION DOCUMENTS

ISSUE DATE:
07/06/2015

REVISIONS:

PANEL SCHEDULES & CALCULATIONS

E3