Eagle Harbor Waterfront Park

100% Design Development Set
04/29/2015

PROJECT TEAM

OWNER:
City of Bainbridge Island
280 Madison Avenue North
Bainbridge Island, WA 98110
Ph. 206-780-3721
Contact: Mark Epstein
E-mail: mepstein@bainbridgewa.gov

LANDSCAPE ARCHITECT:
Walker Macy
105 S. Main Street, Suite 205
Seattle, WA 98104
Ph. 206-582-3874
Contact: Chris Jones
E-mail: cjones@walkermacy.com

CIVIL:
Browne Wheeler Engineers
241 Ericksen Avenue NE
Bainbridge Island, WA 98110
Ph. 206-842-0605
Contact: Kelsey Laughlin
E-mail:
kelsey@brownewheeler.com

ARCHITECT:
Patano Studio Architecture
603 Stewart St. Suite 207
Seattle, WA 98101
Ph. 206-734-3870
Contact: Christopher Patano
E-mail: christopher@patanostudio.com

STRUCTURAL:
Lund Opsahl
1201 First Avenue South, Suite 310
Seattle, WA 98134
Ph. 206-402-5156
Contact: Adam Slivers
E-mail: ASlivers@LundOpsahl.com

ELECTRICAL / LIGHTING:
PAE Consulting Engineers / Luma Lighting Design
1501 East Madison Street, Suite 300
Seattle, WA 98122
Ph. 206-596-8606
Contact: Shaun Darragh
E-mail: shaund@lumald.com

ENVIRONMENTAL CONSULTANT:
Herrera Environmental Consultants
2200 Sixth Avenue, Suite 1100
Seattle, WA 98121
Ph. 206-441-9080
Contact: Kris Lepine
E-mail: klepine@herrerainc.com

PROJECT SUMMARY

SITE ADDRESS: 301 SHANNON DR SE
ZONING: XXXXXX
TAX LOT ID NUMBERS: XXXXXX

PROJECT DESCRIPTION: Waterfront Park

GOVERNING AGENCY: City of Bainbridge Island
280 Madison Avenue North
Bainbridge Island, WA 98110
Ph. 206-842-7633
Web: www.ci.bainbridge-isl.wa.us

VICINITY MAP

NTS

SHEET INDEX

SITE / LANDSCAPE
CS *COVER SHEET*
L101 *DEMOLITION PLAN*
L201 *MATERIALS PLAN*
L301 *LAYOUT PLAN*
L401 *GRADING PLAN*
L402 *GRADING PLAN ENLARGEMENT*
L500 *IRRIGATION SCHEDULE*
L501 *IRRIGATION PLAN*
L601 *PLANTING PLAN*
L700 *SITE DETAILS*
L701 *SITE DETAILS*
L702 *SITE DETAILS*
L703 *STORMWATER DETAILS*
L704 *SITE FURNISHING DETAILS*
L705 *IRRIGATION DETAILS*
L706 *PLANTING DETAILS*

CIVIL
C1 *GENERAL NOTES*
C2 *TEST PLAN & DETAILS*
C3 *UTILITY PLAN*
C4 *UTILITY DETAILS*

ARCHITECTURAL
A0.0 *SCHEDULES, ABBREV., SYMBOLS, NOTES*
A2.0 *FLOOR PLAN*
A2.1 *ROOF PLAN, ADD ALT. ROOF PLAN*
A3.0 *ELEVATIONS*
A3.1 *ELEVATIONS*
A4.0 *SECTIONS*
A4.1 *SECTIONS*

LIGHTING
E1.0 *LIGHTING PLAN*

NOT FOR CONSTRUCTION

CITY OF BAINBRIDGE ISLAND
280 MADISON AVE. NORTH
BAINBRIDGE ISLAND, WA 98110

WALKER | MACY

EAGLE HARBOR WATERFRONT PARK
BAINBRIDGE ISLAND, WA

PROJECT NUMBER: P3119.01
DRAWN BY:
REVIEWED BY:
PHASE: 80% CONSTRUCTION DOCUMENTS
ISSUE DATE: 06/17/2015
REVISIONS:

COVER SHEET

CS

GENERAL NOTES

1. UNLESS OTHERWISE SPECIFIED, MATERIALS AND WORKMANSHIP SHALL BE IN ACCORDANCE WITH THE REQUIREMENTS OF THE CURRENTLY ADOPTED EDITION OF "STANDARD SPECIFICATIONS FOR ROAD, BRIDGE AND MUNICIPAL CONSTRUCTION", APWA/WSDOT EXCEPT AS MODIFIED BY THE CITY OF BAINBRIDGE ISLAND IN THE CURRENT EDITION OF "DESIGN AND CONSTRUCTION STANDARDS AND SPECIFICATIONS"

2. THE LOCATIONS OF EXISTING UNDERGROUND UTILITIES AND OTHER FEATURES ON THE PLAN ARE APPROXIMATE AND MAY NOT BE COMPLETE. ACTUAL LOCATIONS SHALL BE FIELD VERIFIED BY THE CONTRACTOR AS REQUIRED.

3. CONTRACTOR SHALL BE SOLELY RESPONSIBLE FOR WORKER SAFETY. ALL TRENCHING AND OTHER ACTIVITIES SHALL BE IN ACCORDANCE WITH STATE AND LOCAL SAFETY REGULATIONS AND REQUIREMENTS.

4. A COPY OF THE APPROVED PLANS AND OTHER APPLICABLE SPECIFICATIONS AND DRAWINGS SHALL BE ONSITE DURING CONSTRUCTION.

5. CONTRACTOR SHALL OBTAIN AN UNDERGROUND UTILITIES LOCATE PRIOR TO BEGINNING CONSTRUCTION (UNDERGROUND UTILITIES LOCATION SERVICE, 1-800-424-5555).

6. CONTRACTOR SHALL INSTALL, REPLACE OR RELOCATE ALL SIGNS AND OTHER FEATURES AFFECTED BY CONSTRUCTION.

7. CONTRACTOR SHALL APPLY FOR AND OBTAIN AN APPROVED PERMIT FOR WORK IN THE RIGHT OF WAY PRIOR TO ANY WORK IN THE RIGHT OF WAY.

8. CONTRACTOR SHALL SCHEDULE AND ATTEND A PRE-CONSTRUCTION CONFERENCE WITH CITY STAFF PRIOR TO ANY WORK ON CITY RIGHTS-OF-WAY.

9. ANY REVISIONS TO THE PLANS SHALL BE REVIEWED AND APPROVED BY THE BAINBRIDGE ISLAND ENGINEERING DEPARTMENT PRIOR TO IMPLEMENTATION IN THE FIELD.

10. SIGNING, FLAGGING AND TRAFFIC CONTROL SHALL BE IN ACCORDANCE WITH THE CURRENT EDITION OF THE WSDOT TRAFFIC MANUAL AND THE MANUAL OF UNIFORM TRAFFIC CONTROL DEVICES. THE PLAN SHALL BE PROVIDED TO THE CITY FOR APPROVAL IF APPLICABLE.

11. ALL PIPE AND OTHER MATERIAL STORED ALONG CITY RIGHT-OF-WAY MUST BE PLACED AT A SAFE DISTANCE FROM THE TRAVELED ROADWAY IN SUCH A MANNER AS TO AVOID FALLING ONTO THE ROADWAY.

12. MAXIMUM LENGTH OF OPEN TRENCH ON STREETS SHALL BE 400 FEET. AT THE END OF EACH DAY, ALL TRENCHES MUST BE BACKFILLED OR COVERED WITH STEEL PLATES OR BARRICADED WITH FLASHING WARNING LIGHTS.

13. ALL PIPE TRENCH BACKFILL SHALL BE IN ACCORDANCE WITH THE WSDOT/APWA SPECIFICATIONS FOR PIPE BEDDING AND BANK RUN GRAVEL IF PROPER COMPACTION CANNOT BE OBTAINED USING NATIVE SOIL, EXCEPT AS NOTED ON PLAN.

14. POWER, TELEVISION CABLE, AND COMMUNICATIONS LINES SHALL BE INSTALLED WITH A MINIMUM OF FIVE FEET HORIZONTAL SEPARATION FROM PUBLIC WATER, SEWER AND STORM DRAINAGE FACILITIES.

EROSION CONTROL NOTES

1. THE CONTRACTOR SHALL APPLY ALL MEASURES NECESSARY TO PREVENT THE DISCHARGE OF SEDIMENT-LADEN WATER OFF THE PROJECT SITE. FACILITIES SHOWN ON THE PLANS ARE THE MINIMUM REQUIREMENTS FOR ANTICIPATED SITE CONDITIONS.

2. THE CONTRACTOR SHALL INSPECT AND MAINTAIN ALL EROSION CONTROL FACILITIES REGULARLY, PARTICULARLY DURING AND FOLLOWING LARGE STORMS.

3. ALL STREETS ADJACENT TO THIS PROJECT SHALL BE KEPT CLEAN OF ALL MATERIAL DEPOSITS RESULTING FROM CONSTRUCTION.

4. SITE WORK SHALL BE SCHEDULED TO MINIMIZE THE EXPOSURE OF DISTURBED SOILS. ALL EXPOSED AND UNWORKED SOILS, INCLUDING SOIL STOCKPILES, SHALL BE STABILIZED BY SUITABLE APPLICATION OF BMPS THAT PROTECT SOIL FROM THE EROSIVE FORCES OF RAINDROP IMPACT AND FLOWING WATER. APPLICABLE PRACTICES INCLUDE, BUT ARE NOT LIMITED TO VEGETATIVE ESTABLISHMENT, MULCHING, PLASTIC COVERING, AND THE EARLY APPLICATION OF GRAVEL BASE ON AREAS TO BE PAVED. FROM OCTOBER 1 THROUGH APRIL 30, NO SOILS SHALL REMAIN EXPOSED FOR MORE THAN 2 DAYS. FROM MAY 1 THROUGH SEPTEMBER 30, NO SOILS SHALL REMAIN EXPOSED FOR MORE THAN 7 DAYS.

5. CARE SHALL BE TAKEN TO PREVENT ANY DISCHARGE OF SEDIMENT-LADEN WATER INTO THE STORMWATER DISPERSION SYSTEMS. ANY INLETS WHICH RECEIVE RUNOFF SHOULD BE PROTECTED WITH SEDIMENT FILTERS.

6. PETROLEUM PRODUCTS AND OTHER POTENTIAL POLLUTANTS SHALL BE PROTECTED TO PREVENT THEIR INTRODUCTION INTO SITE RUNOFF OR THE STORM DRAINAGE SYSTEM.

7. DEWATERING WATER SHALL BE FILTERED TO REMOVE SEDIMENT AND DISCHARGED IN A MANNER TO AVOID DOWNSTREAM IMPACTS.

8. CLEARING LIMITS, IF SHOWN, SHALL BE CLEARLY FLAGGED PRIOR TO ANY CLEARING OR CONSTRUCTION ON THE SITE. DURING CONSTRUCTION, NO DISTURBANCE BEYOND THE FLAGGED CLEARING LIMITS SHALL BE PERMITTED. THE FLAGGING SHALL BE MAINTAINED BY THE CONTRACTOR UNTIL ALL CONSTRUCTION IS APPROVED.

9. ALL TEMPORARY EROSION CONTROL FACILITIES, INCLUDING PERIMETER CONTROLS, SHALL REMAIN IN PLACE UNTIL FINAL SITE CONSTRUCTION IS COMPLETE AND APPROVAL HAS BEEN RECEIVED FROM THE CITY.

STORM DRAINAGE

1. STORM DRAINS SHALL BE SMOOTH INTERIOR CORRUGATED POLYETHYLENE (ADS N12 OR EQUIVALENT) OR PVC (ASTM D3034, SDR 35) UNLESS OTHERWISE NOTED.

2. ALL STORM DRAINS SHOULD BE LAID AT A MINIMUM SLOPE OF 2% (1/4 INCH PER FOOT) UNLESS OTHERWISE NOTED. CARE SHALL BE TAKEN TO MAINTAIN MINIMUM SLOPE.

3. PRIOR TO FINAL INSPECTION AND ACCEPTANCE OF STORM DRAINAGE WORK, PIPES AND STORM DRAIN STRUCTURES SHALL BE CLEANED AND FLUSHED. ANY OBSTRUCTIONS WITHIN THE STORM DRAIN SYSTEM SHALL BE REMOVED AND WASH WATER OF ANY SORT SHALL NOT BE DISCHARGED TO THE STORM DRAIN SYSTEM OR SURFACE WATERS.

5. ALL MANHOLES AND CATCH BASINS IN PUBLIC RIGHTS-OF-WAY SHALL BE ADJUSTED TO FINAL GRADE PRIOR TO FINAL PAVING.

6. CURTAIN AND FOOTING DRAINS SHALL BE CONNECTED TO STORM DRAIN SYSTEM AT EITHER A CATCH BASIN OR WHEN 1 VERTICAL FOOT IS MAINTAINED BETWEEN THE LOWEST POINT OF THE FOUNDATION DRAIN INVERT AND THE ELEVATION OF THE STORM DRAIN SYSTEM.

APPROXIMATE GRADING VOLUMES

CUT VOLUME: -- CUBIC YARDS

FILL VOLUME: -- CUBIC YARDS

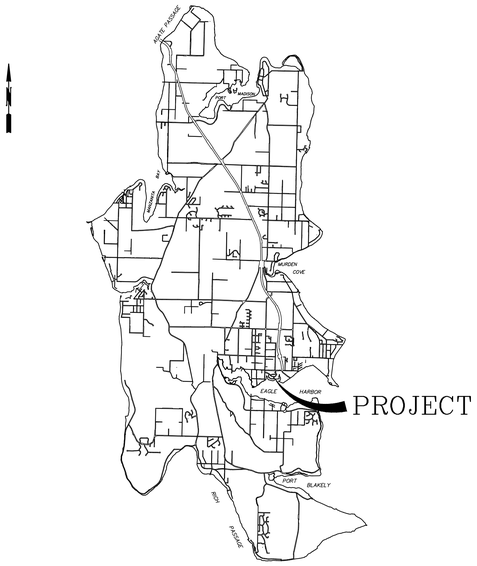

VICINITY MAP

CITY OF BAINBRIDGE ISLAND

280 MADISON AVE. NORTH
BAINBRIDGE ISLAND, WA 98110

WALKER | MACY

BROWNE • WHEELER
ENGINEERS, INC
241 ERICKSEN AVENUE NE
BAINBRIDGE ISLAND, WA 98110
P.206.842.6605 INFO@BrowneWheeler.COM

EAGLE HARBOR WATERFRONT PARK

BAINBRIDGE ISLAND, WA

PRELIMINARY
NOT FOR CONSTRUCTION

DAVID W. BROWNE
STATE OF WASHINGTON
18569
REGISTERED
PROFESSIONAL ENGINEER

PROJECT NUMBER: WA16-01 P3119.01

DRAWN BY: K. LAUGHLIN

REVIEWED BY: D. BROWNE

PHASE:
80% SUBMITTAL

ISSUE DATE:
6-15-2015

REVISIONS:

GENERAL NOTES

C1

N

TESC PLAN

SCALE: 1" = 20' 0 5 10 20 40

TOPOGRAPHIC INFORMATION BASED ON SITE SURVEY PROVIDED BY COBI DATED APRIL 20, 2006.
SITE PLAN FROM WALKER MACY DATED 6/9/2015.

DATUM: CITY OF BAINBRIDGE ISLAND VERTICAL CONTROL NETWORK (NAVD 88)

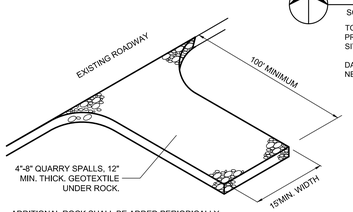

ADDITIONAL ROCK SHALL BE ADDED PERIODICALLY TO MAINTAIN EFFECTIVENESS IN REMOVING MUD FROM TIRES.

SLOPE ENTRANCE TO DISPERSE RUNOFF.

ENTRANCE LENGTH MAY BE REDUCED TO MAXIMUM PRACTICABLE SIZE BASED ON SITE CONDITIONS.

1 C2 ROCK CONSTRUCTION ENTRANCE

NO SCALE

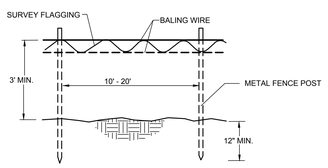

2 C2 CLEARING LIMITS FENCE

NO SCALE

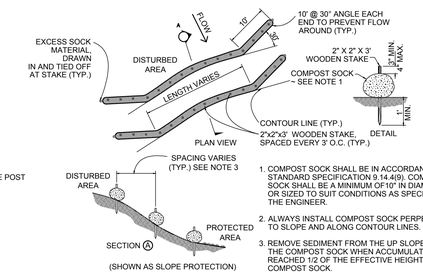

1. COMPOST SOCK SHALL BE IN ACCORDANCE WITH STANDARD SPECIFICATION 9.14.4(9). COMPOST SOCK SHALL BE A MINIMUM OF 10" IN DIAMETER OR SIZED TO SUIT CONDITIONS AS SPECIFIED BY THE ENGINEER.
2. ALWAYS INSTALL COMPOST SOCK PERPENDICULAR TO SLOPE AND ALONG CONTOUR LINES.
3. REMOVE SEDIMENT FROM THE UP SLOPE SIDE OF THE COMPOST SOCK WHEN ACCUMULATION HAS REACHED 1/2 OF THE EFFECTIVE HEIGHT OF THE COMPOST SOCK.
4. MAY BE USED IN PLACE OF FILTER FENCE FOR PERMITER CONTROL.

3 C2 MULCH WATTLE

NO SCALE

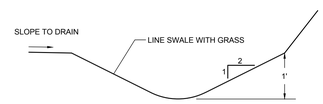

4 C2 INTERCEPTOR SWALE

NO SCALE

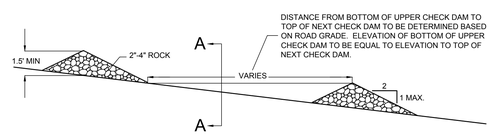

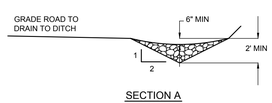

5 C2 CHECK DAM

NO SCALE

CITY OF BAINBRIDGE ISLAND
280 MADISON AVE. NORTH
BAINBRIDGE ISLAND, WA 98110

WALKER | MACY

BROWNE • WHEELER ENGINEERS, INC
241 ERICKSEN AVENUE NE
BAINBRIDGE ISLAND, WA 98110
P 206.842.0405 INFO@BrowneWheeler.COM

EAGLE HARBOR WATERFRONT PARK

BAINBRIDGE ISLAND, WA

PRELIMINARY
NOT FOR CONSTRUCTION

DAVID W. BROWNE
STATE OF WASHINGTON
18591
REGISTERED
PROFESSIONAL ENGINEER

PROJECT NUMBER: WA16-01	P3119.01
DRAWN BY: K. LAUGHLIN	REVIEWED BY: D. BROWNE

PHASE
80% SUBMITTAL

ISSUE DATE:
6-15-2015

REVISIONS:

TESC PLAN & DETAILS

2 OF 4

C2

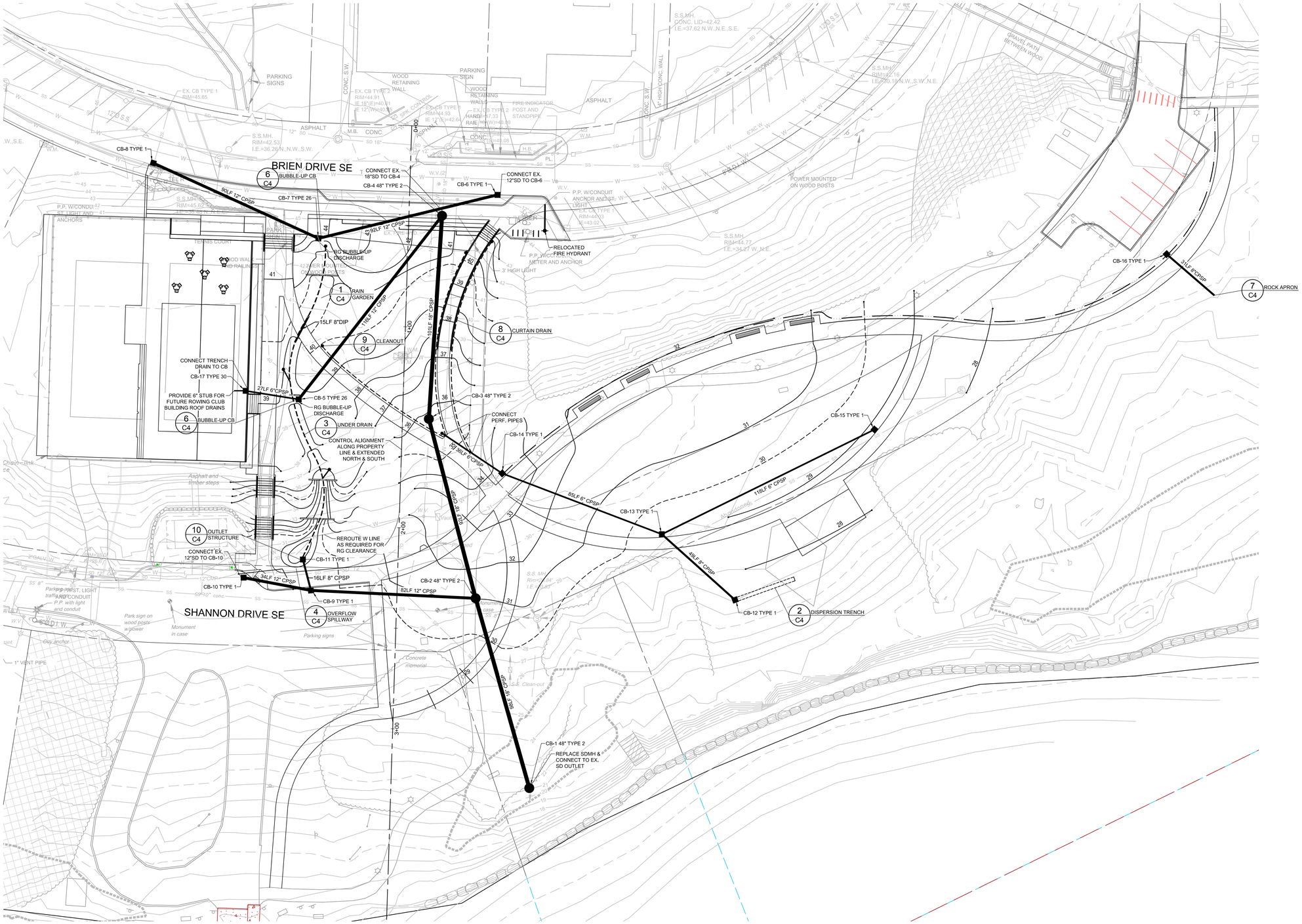

N

SITE PLAN

SCALE: 1" = 20'

0 5 10 20 40

TOPOGRAPHIC INFORMATION BASED ON SITE SURVEY PROVIDED BY COBI DATED APRIL 20, 2006.
SITE PLAN FROM WALKER MACY DATED 6/9/2015.

DATUM: CITY OF BAINBRIDGE ISLAND VERTICAL CONTROL NETWORK (NAVD 88)

CITY OF BAINBRIDGE ISLAND
280 MADISON AVE. NORTH
BAINBRIDGE ISLAND, WA 98110

WALKER | MACY

BROWNE • WHEELER ENGINEERS, INC
241 ERICKSEN AVENUE NE
BAINBRIDGE ISLAND, WA 98110
P 206.842.0605 INFO@BrowneWheeler.COM

EAGLE HARBOR WATERFRONT PARK

BAINBRIDGE ISLAND, WA

PRELIMINARY
NOT FOR CONSTRUCTION

DAVID W. BROWNE
STATE OF WASHINGTON
18591
REGISTERED PROFESSIONAL ENGINEER

PROJECT NUMBER: WA16-01	P3119.01
DRAWN BY: K. LAUGHLIN	REVIEWED BY: D. BROWNE

PHASE:
80% SUBMITTAL

ISSUE DATE:
6-15-2015

REVISIONS:

UTILITY PLAN

C3

BIORETENTION NOTES

CONSTRUCTION

1. MINIMIZE COMPACTION OF THE BASE AND SIDEWALLS OF THE BIORETENTION AREA.

2. EXCAVATION IS NOT ALLOWED DURING WET OR SATURATED CONDITIONS. EXCAVATION SHOULD BE PERFORMED BY MACHINERY OPERATION ADJACENT TO THE BIORETENTION FACILITY AND NO HEAVY EQUIPMENT WITH NARROW TRACKS, NARROW TIRES, OR LARGE LUGGED, HIGH PRESSURE TIRES SHOULD BE USED ON THE BOTTOM OF THE BIORETENTION FILTRATION FACILITY. IF MACHINERY MUST OPERATE IN THE BIORETENTION CELL FOR EXCAVATION, USE LIGHT WEIGHT, LOW GROUND-CONTACT PRESSURE EQUIPMENT AND RIP THE BASE AT COMPLETION TO REFRACTURE SOIL TO A MINIMUM OF 12 INCHES.

3. THE SIDEWALLS AND BOTTOM SHOULD BE ROUGHENED WHERE SCRAPED AND SEALED BY EXCAVATION EQUIPMENT. THE BOTTOM OF THE FACILITY SHOULD BE FLAT.

4. THE BIORETENTION SOIL MIXTURE SHOULD BE PLACED AND GRADED BY EXCAVATORS AND/OR BACKHOES OPERATING ADJACENT TO THE BIORETENTION FACILITY. IF MACHINERY MUST OPERATE IN THE BIORETENTION CELL FOR SOIL PLACEMENT OR SOIL GRADING, USE LIGHT WEIGHT, LOW GROUND-CONTACT PRESSURE EQUIPMENT. THE SOIL MIXTURE SHOULD BE PLACED IN HORIZONTAL LAYERS NOT TO EXCEED 6 INCHES PER LIFT FOR THE ENTIRE AREA OF THE BIORETENTION FACILITY.

ENGINEERED SOIL MIX

SOIL MIX:
APPROXIMATELY 3 PARTS GRAVELLY SAND AND 2 PARTS COMPOST BY VOLUME, TO MEET THE SPECIFICATIONS LISTED BELOW:

GRAVELLY SAND GRADATION

SIEVE SIZE	PERCENT PASSING
1-INCH	100
US NO. 4	60-100
US NO. 10	40-100
US NO. 40	15-50
US NO. 200	2-5

COEFFICIENT OF UNIFORMITY >6
COEFFICIENT OF CURVE 1<X<3

COMPOST
GRADATION PER TMECC 02.02-B

SIEVE SIZE	PERCENT PASSING
1-INCH	100
5/8-INCH	100
1/4-INCH	90

1. pH 5.5-8
2. INERT MATERIAL <1% BY WEIGHT PER TMECC 03.08-A
3. ORGANIC CONTENT 45%<X<65% PER TMECC 05.07-A
4. SOLUBLE SALT <6.0 MMHOS/CM PER TMECC 04.10-A
5. MATURITY >80% PER TMECC 05.05-A
6. STABILITY <7 PER TMECC 05.08-B
7. COMPOST SHALL CONSIST OF AT LEAST 65% TYPE I FEEDSTOCKS AND LESS THAN 35% TYPE III FEED STOCKS PER WAC173-350-100.
8. CARBON TO NITROGEN < 25:1 PER TMECC 04.01

1. MINIMUM INITIAL SOIL MIX HYDRAULIC CONDUCTIVITY => 6.0 INCH/HOUR, ASTM D2434 - STANDARD TEST FOR PERMEABILITY OF GRANULAR SOILS. TESTED AT 85% COMPACTION, PER ASTM D 1557 - STANDARD TEST METHODS FOR LABORATORY COMPACTION CHARACTERISTICS OF SOIL USING MODIFIED EFFORT.

2. THE SOIL MIXTURE SHOULD BE UNIFORM, FREE OF STONES, STUMPS, ROOTS OR SIMILAR OBJECTS LARGER THAN 2 INCHES.

3. ON-SITE SOIL MIXING OR PLACEMENT NOT ALLOWED IF SOIL IS SATURATED OR SUBJECT TO WATER WITHIN 48 HOURS.

4. COVER AND STORE SOIL ACCORDINGLY TO PREVENT WETTING OR SATURATION.

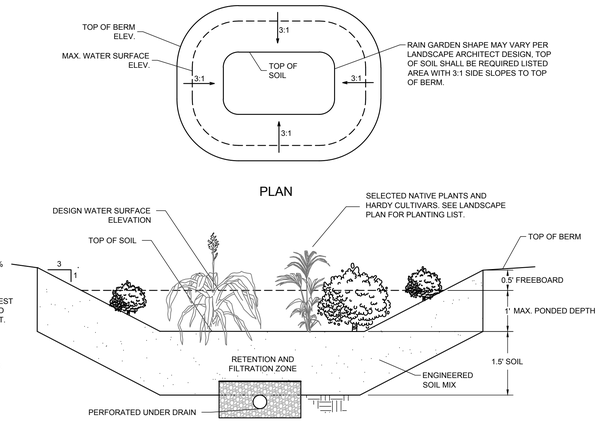

1 / C4 RAIN GARDEN
NO SCALE

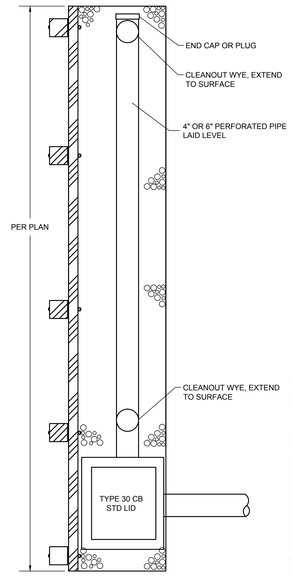

2 / C4 DISPERSION TRENCH
NO SCALE

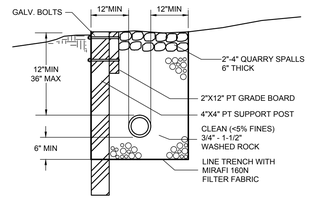

SECTION-DISPERSAL TRENCH

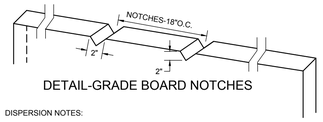

DETAIL-GRADE BOARD NOTCHES

DISPERSION NOTES:

CONSTRUCT TRENCH TO DISPERSE FLOW ACROSS ENTIRE LENGTH.

TRENCH AND GRADE BOARD MUST BE LEVEL. ALIGN TO FOLLOW CONTOURS.

SUPPORT POST SPACING AS REQUIRED BY SOIL CONDITIONS TO ENSURE STURDY SUPPORT OF GRADE BOARD.

LOCATION OF DISPERSION TRENCH MAY BE ADJUSTED IN FIELD. MINIMUM DISTANCES LISTED MUST BE MAINTAINED:
- MINIMUM 5-FT FROM STRUCTURES OR PROPERTY LINE.
- MINIMUM 50-FT HORIZONTAL DISTANCE FROM PRIVATE WELL.
- MINIMUM 30-FT UP GRADIENT OF OSS FIELDS AND TANKS.
- MINIMUM 10-FT SIDE OR DOWN GRADIENT OF OSS FIELDS AND TANKS.

DISPERSION AREA SHOWN ON THE PLANS SHALL BE PROTECTED FROM DISTURBANCE DURING CONSTRUCTION. IF THIS AREA IS DISTURBED, THE SOIL SHALL BE AMENDED IN ACCORDANCE WITH THE SOIL AMENDMENT NOTES. REMOVAL OF TREES IS ALLOWED IF THE ROOT BALL IS UNDISTURBED. ANY PLANT MATERIAL REMOVED SHALL BE REPLACED WITH NATIVE VEGETATION.

GRAVEL FILTER+	
U.S. STD. SIEVE	% PASSING
1 1/2"	100
1"	95-100
1/2"	25-60
#4	0-10
#8	0-5

+ GRAVEL FILTER SHOULD BE 3/8" TO 3/4" UNIFORMLY GRADED STONE WITH A WASH LOSS OF NO MORE THEN 0.5% (AASHTO SIZE #57).

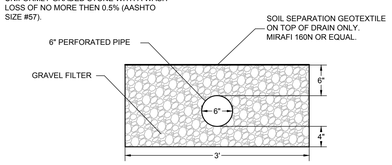

3 / C4 UNDER DRAIN
NO SCALE

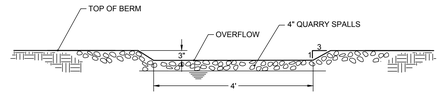

4 / C4 OVERFLOW SPILLWAY
NO SCALE

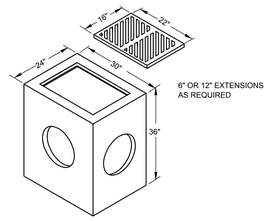

5 / C4 CB - TYPE 30
NO SCALE

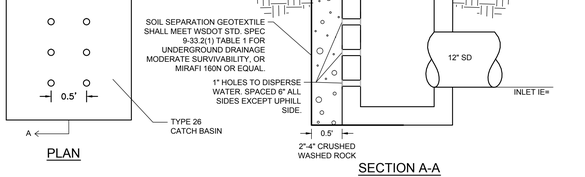

6 / C4 BUBBLE-UP CB
NO SCALE

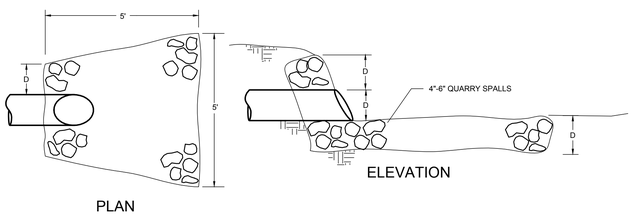

7 / C4 ROCK APRON
NO SCALE

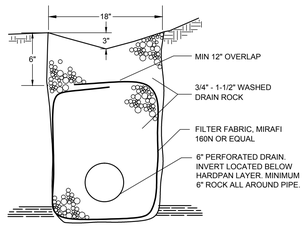

8 / C4 CURTAIN DRAIN
NO SCALE

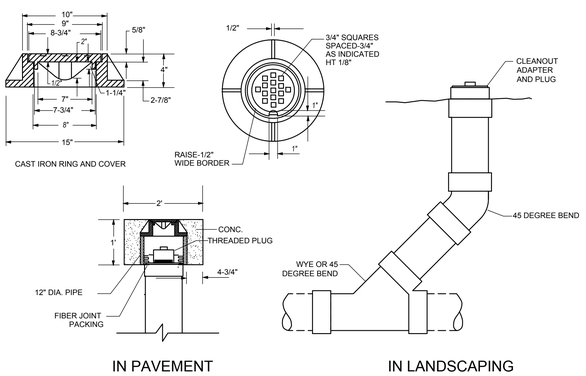

9 / C4 CLEANOUT
NO SCALE

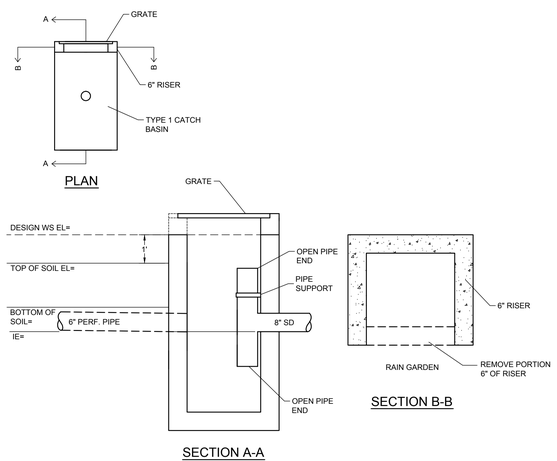

10 / C4 OUTLET STRUCTURE
NO SCALE

CITY OF BAINBRIDGE ISLAND
280 MADISON AVE. NORTH
BAINBRIDGE ISLAND, WA 98110

WALKER | MACY

BROWNE • WHEELER ENGINEERS, INC
241 ERICKSEN AVENUE NE
BAINBRIDGE ISLAND, WA 98110
P.206.842.0605 INFO@BrowneWheeler.COM

EAGLE HARBOR WATERFRONT PARK

BAINBRIDGE ISLAND, WA

PRELIMINARY
NOT FOR CONSTRUCTION

DAVID W. BROWNE
STATE OF WASHINGTON
18599
REGISTERED
PROFESSIONAL ENGINEER

PROJECT NUMBER: WA16-01 P3119.01
DRAWN BY: K. LAUGHLIN
REVIEWED BY: D. BROWNE
PHASE: **80% SUBMITTAL**
ISSUE DATE: 6-15-2015
REVISIONS:

UTILITY DETAILS

KEY NOTES

1. REMOVE ROCK WALL
2. REMOVE AND RELOCATE MANHOLE PER SHEET L201
3. REMOVE PARK SIGN
4. REMOVE AND RELOCATE POWER SERVICE, SEE SHEET L201
5. RELOCATE EXISTING FIRE HYDRANT, SEE SHEET L201
6. REMOVE (15) EXISTING LIGHTS, POLES & FOOTINGS, TYP.
7. REMOVE STAGE, IN TACT. OWNER TO DIRECT CONTRACTOR WHERE TO RELOCATE. CONTRACTOR SHALL ASSUME RELOCATION IS WITHIN 10 MILES. CONTRACTOR TO PROVIDE FOUNDATION FOR RELOCATED STAGE
8. REMOVE BASKETBALL HOOP AND BOLLARDS.
9. REMOVE EXISTING VAULT AND BACKFLOW DEVICE PER APPLICABLE CODES
10. PRESERVE AND PROTECT PARKING SIGNS
11. PRESERVE AND PROTECT P.P. AND ANCHOR
12. REMOVE METER AND VALVE
13. REMOVE CATCH BASIN
14. PRESERVE AND PROTECT EXISTING MONUMENT

GENERAL NOTES

1. CONTRACTOR TO NOTIFY OWNER'S REPRESENTATIVE OF ANY DISCREPANCIES BETWEEN THE PLANS AND THE EXISTING CONDITIONS BEFORE STARTING WORK.
2. ALL WORK SHALL BE PERFORMED IN STRICT ACCORDANCE WITH THE TEMPORARY TREE AND PLANT PROTECTION SPECIFICATIONS FOR THE PROJECT.

LEGEND

- LIMIT OF DEMOLITION WORK
- REMOVE EXISTING CURB, RAILING, AND FENCE, INCLUDING ANY ASSOCIATED FOOTINGS AND BASE MATERIAL
- PAVING SAWCUT LINE
- STRIP LAWN TO 6", CLEAR AND GRUB VEGETATION
- SELECTIVE CLEARING AND GRUBBING, STRIP LAWN SELECTIVELY, LIMB UP TREES AS DIRECTED BY ARCHITECT. CLEARING AND GRUBBING WITHIN THIS AREA SHALL BE DONE BY HAND METHODS ONLY
- REMOVE EXISTING ASPHALT, CONCRETE, RAILINGS, STAIRS, R.R. TIES, AND PEA GRAVEL – FULL DEPTH
- REMOVE EXISTING CONCRETE PAVING AND BASE MATERIAL – FULL DEPTH
- REMOVE EXISTING STAMPED CONCRETE – FULL DEPTH
- REMOVE EXISTING TENNIS COURT PAVING, BASE MATERIAL, FENCING AND ASSOCIATED APPURTENANCES
- TREE PROTECTION FENCE
- PROTECT EXISTING TREE TO REMAIN
- REMOVE EXISTING TREE
- REMOVE EXISTING LIGHT POLE AND FOOTING

0 5 10 20 40
SCALE: 1" = 20'-0"

NORTH

NOT FOR CONSTRUCTION

CITY OF BAINBRIDGE ISLAND
280 MADISON AVE. NORTH
BAINBRIDGE ISLAND, WA 98110

WALKER | MACY

EAGLE HARBOR WATERFRONT PARK

BAINBRIDGE ISLAND, WA

PROJECT NUMBER: P3119.01
DRAWN BY: KH
REVIEWED BY: CJ/DO
PHASE: 80% CONSTRUCTION DOCUMENTS
ISSUE DATE: 06/17/2015
REVISIONS:

DEMOLITION AND TREE PROTECTION PLAN

L101

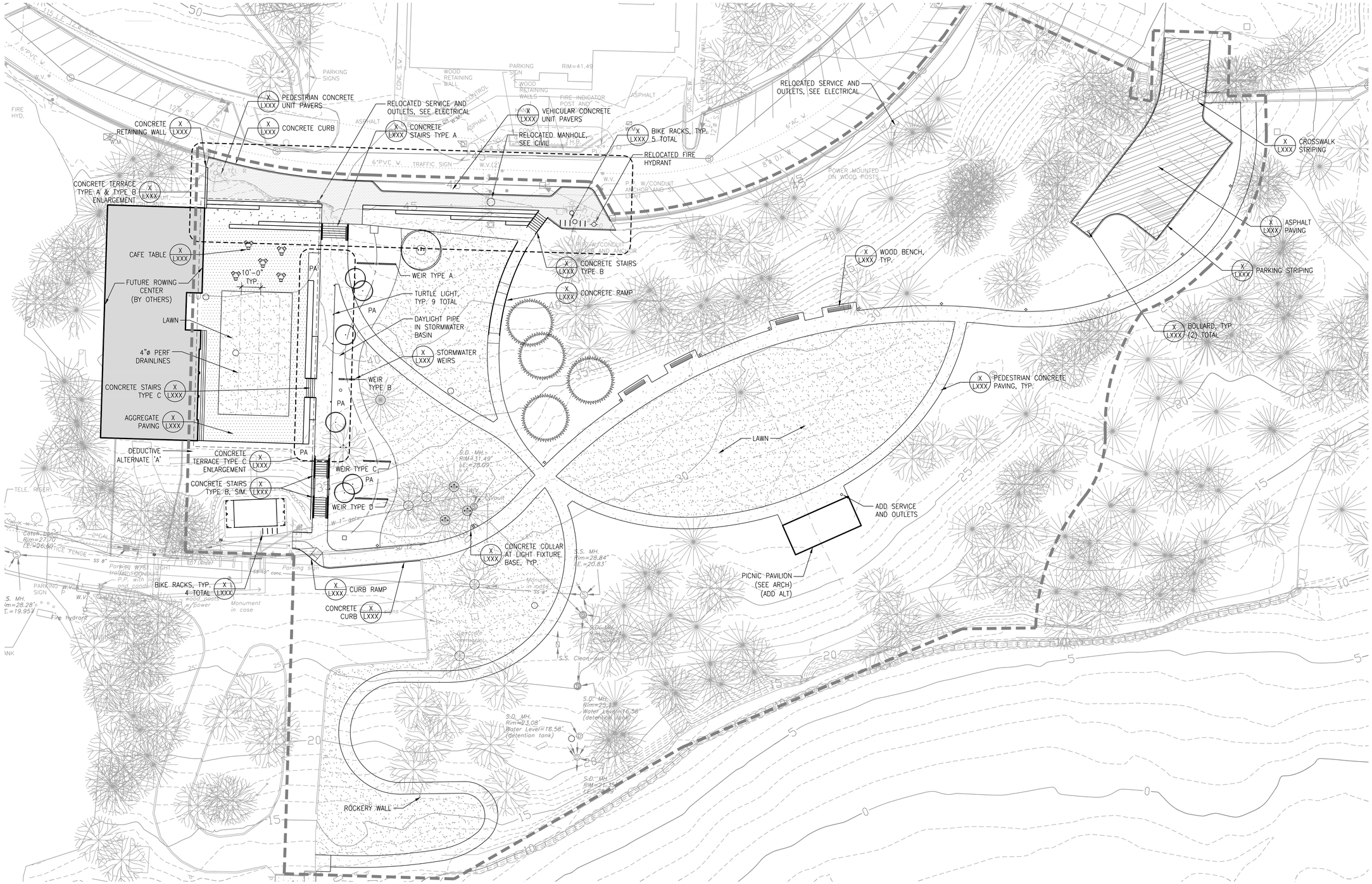

KEY NOTES

1. XXX...
2. XXX...
3. XXX...

GENERAL NOTES

1. CONTRACTOR TO NOTIFY OWNER'S REPRESENTATIVE OF ANY DISCREPENCIES BETWEEN THE PLANS AND THE EXISTING CONDITIONS BEFORE STARTING WORK.

LEGEND

- UNIT PAVERS
- CONCRETE PAVING – PEDESTRIAN
- ASPHALT PAVING – VEHICULAR
- AGGREGATE PAVING – PEDESTRIAN
- DETECTABLE WARNING
- LAWN AREA
- PA — PLANTING AREA
- STORMWATER PLANTING AREA
- GUARDRAIL
- RETAINING WALL
- 4"ø PERF DRAINLINES
- AREA DRAIN/CATCH BASIN
- MANHOLE
- TRENCH DRAIN
- BENCH
- LIGHT POLE
- RELOCATED FIRE HYDRANT
- BIKE RACK
- TRASH/RECYCLING
- CAFE TABLES
- PROPOSED TREE
- EXISTING TREE

0 5 10 20 40
SCALE: 1" = 20'-0"

NORTH

NOT FOR CONSTRUCTION

CITY OF BAINBRIDGE ISLAND
280 MADISON AVE. NORTH
BAINBRIDGE ISLAND, WA 98110

WALKER | MACY

EAGLE HARBOR WATERFRONT PARK

BAINBRIDGE ISLAND, WA

PROJECT NUMBER: P3119.01
DRAWN BY: KH
REVIEWED BY: CJ/DO
PHASE: 80% CONSTRUCTION DOCUMENTS
ISSUE DATE: 06/17/2015
REVISIONS:

MATERIALS PLAN

L201

CURVE DATA

CURVE NO.	CURVE RADIUS	CURVE LENGTH	INCLUDED ANGLE
1	XX.XX'	XX.XX'	XX.XX°
2	XX.XX'	XX.XX'	XX.XX°
3	XX.XX'	XX.XX'	XX.XX°
4	XX.XX'	XX.XX'	XX.XX°
5	XX.XX'	XX.XX'	XX.XX°
6	XX.XX'	XX.XX'	XX.XX°
7	XX.XX'	XX.XX'	XX.XX°
8	XX.XX'	XX.XX'	XX.XX°
9	XX.XX'	XX.XX'	XX.XX°
10	XX.XX'	XX.XX'	XX.XX°
11	XX.XX'	XX.XX'	XX.XX°

CURVE NO.	CURVE RADIUS	CURVE LENGTH	INCLUDED ANGLE
12	XX.XX'	XX.XX'	XX.XX°
13	XX.XX'	XX.XX'	XX.XX°
14	XX.XX'	XX.XX'	XX.XX°
15	XX.XX'	XX.XX'	XX.XX°
16	XX.XX'	XX.XX'	XX.XX°
17	XX.XX'	XX.XX'	XX.XX°
18	XX.XX'	XX.XX'	XX.XX°
19	XX.XX'	XX.XX'	XX.XX°
20	XX.XX'	XX.XX'	XX.XX°
21	XX.XX'	XX.XX'	XX.XX°
22	XX.XX'	XX.XX'	XX.XX°

KEY NOTES

1. XXX...
2. XXX...
3. XXX...

LAYOUT NOTES

1. SITE SURVEY WAS PREPARED BY <insert survey company here> ON <insert date here>. ALL COORDINATES SHOWN ON THE DRAWINGS ARE BASED UPON THE COORDINATE SYSTEM ESTABLISHED BY THE SURVERYOR. WALKER MACY ASSUMES NO RESPONSIBILITY FOR ACCURACY OF SURVEYED CONDITIONS AS SHOWN. SURVEY INFORMATION IS PROVIDED FOR REFERENCE ONLY.
2. DO NOT SCALE FROM THE DRAWINGS. THE LOCATION OF FEATURES NOT SPECIFICALLY DIMENSIONED MAY NOT BE DETERMINED BY SCALE. IF CONFLICTS ARISE IN THE FIELD, CONTACT OWNER'S REPRESENTATIVE FOR RESOLUTION.
3. ALL DIMENSIONS ARE TO THE OUTSIDE FACE OF BUILDINGS AND WALLS OR BACK OF CURBS, UNLESS OTHERWISE NOTED.
4. ALL CURVED OBJECTS SHALL HAVE SMOOTH, CONTINUOUS CURVES WITH CONSISTENT RADII AS INDICATED. EACH CURVE SHALL MEET ADJACENT CURVES OR LINEAR SECTIONS ON THE TANGENT, UNLESS NOTED OTHERWISE.

LEGEND

	BASELINE
	CENTERLINE
	EXTENSION OF BUILDING FACE
IJ	ISOLATION JOINT
DIJ	DOWELLED ISOLATION JOINT
B	BEARING
C	CHORD LENGTH
EQ	EQUAL
L	LENGTH OF CURVE
OC	ON CENTER
POB	POINT OF BEGINNING
PC	POINT OF CURVATURE
PCC	POINT OF COMPOUND CURVATURE
PRC	POINT OF REVERSE CURVATURE
PI	POINT OF INTERSECTION
PT	POINT OF TANGENCY
R	RADIUS
RP	RADIUS CENTER POINT
SP	SPACES
VIF	VERIFY IN FIELD
	ALIGN

0 5 10 20 40
SCALE: 1" = 20'-0"

NORTH

NOT FOR CONSTRUCTION

CITY OF BAINBRIDGE ISLAND
280 MADISON AVE. NORTH
BAINBRIDGE ISLAND, WA 98110

WALKER | MACY

EAGLE HARBOR WATERFRONT PARK

BAINBRIDGE ISLAND, WA

PROJECT NUMBER: P3119.01
DRAWN BY: KH
REVIEWED BY: CJ/DO
PHASE: 80% CONSTRUCTION DOCUMENTS
ISSUE DATE: 06/17/2015
REVISIONS:

LAYOUT PLAN

L301

KEY NOTES

1. XXX...
2. XXX...
3. XXX...

GRADING NOTES

1. VERIFY ACCURACY OF EXISTING GRADES AND INTERPOLATED ELEVATIONS PRIOR TO BEGINNING WORK. NOTIFY OWNER'S REPRESENTATIVE OF ANY DISCREPANCY PRIOR TO BEGINNING WORK.
2. PROTECT ALL TREES INDICATED TO REMAIN.
3. ALL PROPOSED GRADES ARE TO MEET AND BLEND IN WITH EXISTING GRADING AT PROJECT LIMIT, PROPERTY LINES, BUILDING LINES AND EXISTING CURBS.
4. "ROUND OFF" ALL SHARP RIDGES EXISTING ON SITE WHETHER OR NOT SUCH CONDITIONS ARE INDICATED ON PLANS.
5. NOTIFY THE OWNER'S REPRESENTATIVE TO REVIEW ROUGH GRADES PRIOR TO PLACEMENT OF TOPSOIL; AND FINE GRADING PRIOR TO PLANTING.
6. ALL AREAS SHALL HAVE POSITIVE DRAINAGE TO APPROVED DRAINAGE STRUCTURES OR CONVEYANCES.
7. PROVIDE POSITIVE DRAINAGE AWAY FROM BUILDINGS AT 0.5% SLOPE, MINIMUM.
8. ALL WALKWAYS AND PAVED AREAS SHALL HAVE SMOOTH AND CONTINUOUS ELEVATION CHANGES.
9. SET STRAIGHT GRADES BETWEEN GIVEN ELEVATIONS. UNLESS OTHERWISE INDICATED.
10. PROVIDE 2% MAX. SLOPE, PERPENDICULAR TO DIRECTION OF TRAVEL, ON ALL PAVED PEDESTRIAN SURFACES, UNLESS NOTED OTHERWISE.
11. GRADE BREAK LINES ARE SHOWN GRAPHICALLY TO ILLUSTRATE DRAINAGE PATTERNS AND ARE NOT TO BE INSTALLED AS ACTUAL JOINT LINES, EXCEPT WHERE THEY COINCIDE WITH PAVING JOINTS.
12. INSTALL DRAINS IN PAVING, SQUARE WITH AND ALIGNING TO PAVING JOINTS AS SHOWN.
13. VERIFY IN FIELD THAT AS-BUILT CONDITIONS MATCH PRECISE ELEVATIONS INDICATED ON PLANS.
14. SITE SURVEY WAS PREPARED BY CITY OF BAINBRIDGE ISLAND PUBLIC WORKS ON APRIL 20, 2006. ALL GRADES SHOWN ON THE DRAWINGS ARE BASED UPON THE DATUM ESTABLISHED BY THE SURVEYOR. WALKER MACY ASSUMES NO RESPONSIBILITY FOR ACCURACY OF SURVEYED CONDITIONS AS SHOWN. SURVEY INFORMATION IS PROVIDED FOR REFERENCE ONLY. NOT ALL SURVEYED SPOT ELEVATIONS ARE SHOWN.

LEGEND

	PROPOSED CONTOUR
(104)	EXISTING CONTOUR
104.72	PROPOSED SPOT ELEVATION
(104.70)	EXISTING SPOT ELEVATION
GB	GRADE BREAK
	FLOW LINE
MATCH	MATCH EXISTING ELEVATION
4.9%	DIRECTION AND PERCENTAGE OR H:V RATIO OF SLOPE
AD	AREA DRAIN
CB	CATCH BASIN
EA	EACH
FC	FLUSH CURB
FFE	FINISH FLOOR ELEVATION
FG	FINISH GRADE
FL	FLOW LINE
HP	HIGH POINT
HPS	HIGH POINT OF SWALE
LP	LOW POINT
IE	INVERT ELEVATION
BC	BOTTOM OF CURB
TC	TOP OF CURB
BR	BOTTOM OF RAMP
TR	TOP OF RAMP
BS	BOTTOM OF STEP
TS	TOP OF STEP
BW	BOTTOM OF WALL (AT FG OF PAVING)
TW	TOP OF WALL
TD	TRENCH DRAIN
RIM	RIM ELEVATION
R	RISER
T	TREAD
VIF	VERIFY IN FIELD

0 5 10 20 40
SCALE: 1" = 20'-0"

NORTH

NOT FOR CONSTRUCTION

CITY OF BAINBRIDGE ISLAND
280 MADISON AVE. NORTH
BAINBRIDGE ISLAND, WA 98110

WALKER | MACY

EAGLE HARBOR WATERFRONT PARK

BAINBRIDGE ISLAND, WA

PROJECT NUMBER: P3119.01
DRAWN BY: KH
REVIEWED BY: CJ/DO
PHASE: 80% CONSTRUCTION DOCUMENTS
ISSUE DATE: 06/17/2015
REVISIONS:

GRADING PLAN

L401

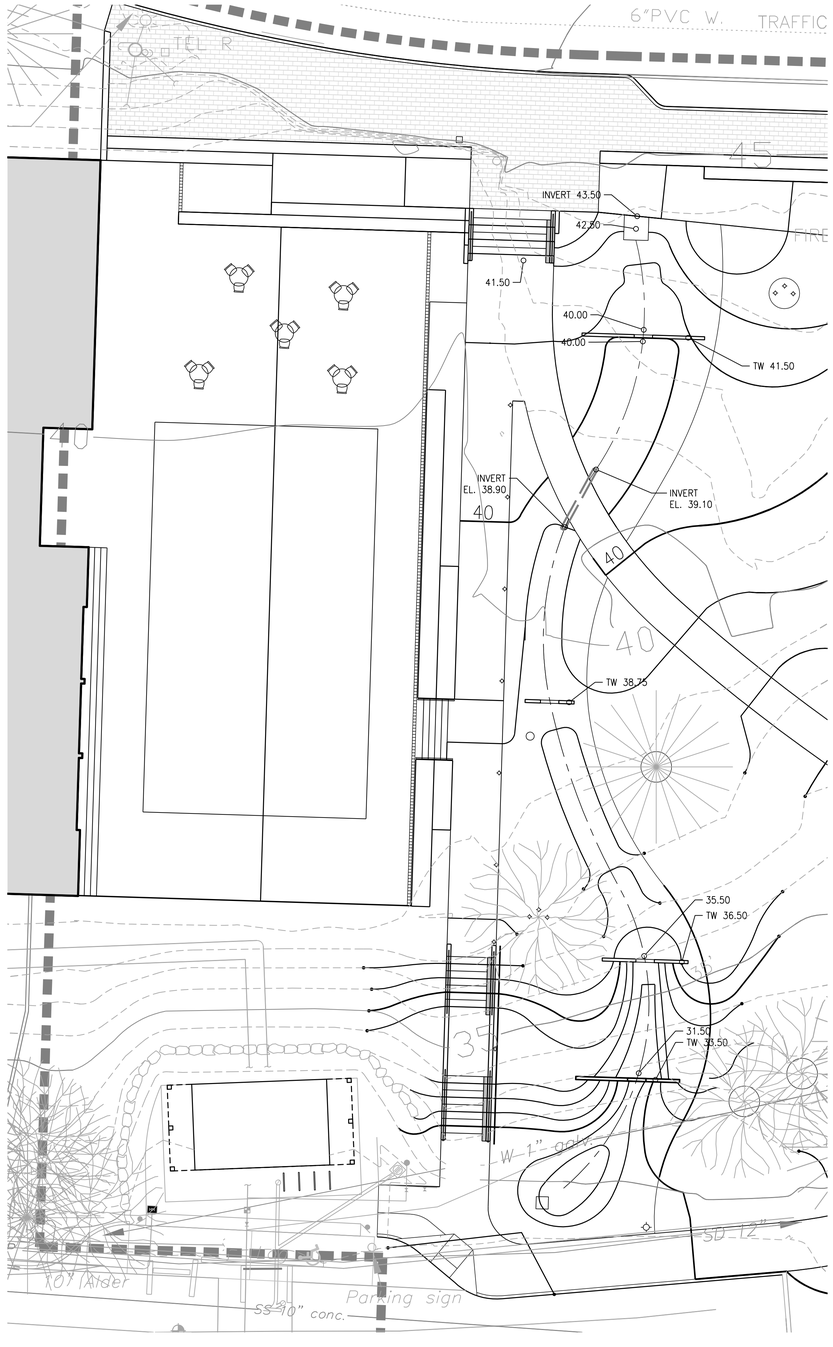

KEY NOTES

1. XXX...
2. XXX...
3. XXX...

GRADING NOTES

1. VERIFY ACCURACY OF EXISTING GRADES AND INTERPOLATED ELEVATIONS PRIOR TO BEGINNING WORK. NOTIFY OWNER'S REPRESENTATIVE OF ANY DISCREPANCY PRIOR TO BEGINNING WORK.
2. PROTECT ALL TREES INDICATED TO REMAIN.
3. ALL PROPOSED GRADES ARE TO MEET AND BLEND IN WITH EXISTING GRADING AT PROJECT LIMIT, PROPERTY LINES, BUILDING LINES AND EXISTING CURBS.
4. 'ROUND OFF' ALL SHARP RIDGES EXISTING ON SITE WHETHER OR NOT SUCH CONDITIONS ARE INDICATED ON PLANS.
5. NOTIFY THE OWNER'S REPRESENTATIVE TO REVIEW ROUGH GRADES PRIOR TO PLACEMENT OF TOPSOIL; AND FINE GRADING PRIOR TO PLANTING.
6. ALL AREAS SHALL HAVE POSITIVE DRAINAGE TO APPROVED DRAINAGE STRUCTURES OR CONVEYANCES.
7. PROVIDE POSITIVE DRAINAGE AWAY FROM BUILDINGS AT 0.5% SLOPE, MINIMUM.
8. ALL WALKWAYS AND PAVED AREAS SHALL HAVE SMOOTH AND CONTINUOUS ELEVATION CHANGES.
9. SET STRAIGHT GRADES BETWEEN GIVEN ELEVATIONS. UNLESS OTHERWISE INDICATED.
10. PROVIDE 2% MAX. SLOPE, PERPENDICULAR TO DIRECTION OF TRAVEL, ON ALL PAVED PEDESTRIAN SURFACES, UNLESS NOTED OTHERWISE.
11. GRADE BREAK LINES ARE SHOWN GRAPHICALLY TO ILLUSTRATE DRAINAGE PATTERNS AND ARE NOT TO BE INSTALLED AS ACTUAL JOINT LINES, EXCEPT WHERE THEY COINCIDE WITH PAVING JOINTS.
12. INSTALL DRAINS IN PAVING, SQUARE WITH AND ALIGNING TO PAVING JOINTS AS SHOWN.
13. VERIFY IN FIELD THAT AS-BUILT CONDITIONS MATCH PRECISE ELEVATIONS INDICATED ON PLANS.
14. SITE SURVEY WAS PREPARED BY CITY OF BAINBRIDGE ISLAND PUBLIC WORKS ON APRIL 20, 2006. ALL GRADES SHOWN ON THE DRAWINGS ARE BASED UPON THE DATUM ESTABLISHED BY THE SURVEYOR. WALKER MACY ASSUMES NO RESPONSIBILITY FOR ACCURACY OF SURVEYED CONDITIONS AS SHOWN. SURVEY INFORMATION IS PROVIDED FOR REFERENCE ONLY. NOT ALL SURVEYED SPOT ELEVATIONS ARE SHOWN.

LEGEND

	PROPOSED CONTOUR
(104)	EXISTING CONTOUR
104.72	PROPOSED SPOT ELEVATION
(104.70)	EXISTING SPOT ELEVATION
GB	GRADE BREAK
	FLOW LINE
MATCH	MATCH EXISTING ELEVATION
4.9%	DIRECTION AND PERCENTAGE OR H:V RATIO OF SLOPE
AD	AREA DRAIN
CB	CATCH BASIN
EA	EACH
FC	FLUSH CURB
FFE	FINISH FLOOR ELEVATION
FG	FINISH GRADE
FL	FLOW LINE
HP	HIGH POINT
HPS	HIGH POINT OF SWALE
LP	LOW POINT
IE	INVERT ELEVATION
BC	BOTTOM OF CURB
TC	TOP OF CURB
BR	BOTTOM OF RAMP
TR	TOP OF RAMP
BS	BOTTOM OF STEP
TS	TOP OF STEP
BW	BOTTOM OF WALL (AT FG OF PAVING)
TW	TOP OF WALL
TD	TRENCH DRAIN
RIM	RIM ELEVATION
R	RISER
T	TREAD
VIF	VERIFY IN FIELD

0 2 5 10 20
SCALE: 1" = 10'-0"

NORTH

NOT FOR CONSTRUCTION

CITY OF BAINBRIDGE ISLAND
280 MADISON AVE. NORTH
BAINBRIDGE ISLAND, WA 98110

WALKER | MACY

EAGLE HARBOR WATERFRONT PARK

BAINBRIDGE ISLAND, WA

PROJECT NUMBER: P3119.01
DRAWN BY: KH
REVIEWED BY: CJ/DO
PHASE: 80% CONSTRUCTION DOCUMENTS
ISSUE DATE: 06/17/2015
REVISIONS:

STORMWATER GRADING PLAN

L402

IRRIGATION EQUIPMENT SCHEDULE

SYMBOL	DESCRIPTION	MANUF.	TYPE/MODEL	DTL/SHEET
P.O.C.	POINT OF CONNECTION	–	–	X/LX.X
M	WATER METER	SEE CIVIL	X" COMPOUND OR TURBINE	X/LX.X
	DOUBLE CHECK VALVE	SEE CIVIL	850-U (X") 350 (X")	X/LX.X
	ISOLATION VALVE	APOLLO WATTS	70-140-10 (LINE SIZE) B6000-SS (LINE SIZE)	X/LX.X
R	PRESSURE REGULATING VALVE	WILKINS WATTS	SERIES 500 (X") N55B	X/LX.X
DV	MANUAL DRAIN VALVE	NIBCO CHAMPION	T-311-Y (1") 200RS-100 (1")	X/LX.X
	QUICK COUPLING VALVE	RAINBIRD HUNTER	44LRC (1") HQ-44-LRC-AW (1")	X/LX.X
	MASTER VALVE (NORMALLY OPEN)	BUCKNER SUPERIOR BERMAD	QB44RC (1") MODEL 5000 (X") MODEL 400 (X")	X/LX.X
	PRESSURE-REGULATING REMOTE CONTROL VALVE	RAINBIRD HUNTER	PEB-PRS-D (SIZE AS NOTED) ICV-G-FS-AS (SIZE AS NOTED)	X/LX.X
	SPRING CHECK VALVE	KBI	BPC-XX*XX*-S	X/LX.X
A	IRRIGATION CONTROLLER	RAINBIRD HUNTER	WALL MOUNT 40 STATIONS XX-XX	X/LX.X
R	RAIN/ET SENSOR	HUNTER	WFRC WIRELESS RAIN/FREEZE-CLIK	X/LX.X
	MAINLINE (2-1/2" AND SMALLER) SIZE PER PLAN	PW EAGLE CRESLINE	SCH 40 PVC	X/LX.X
	LATERAL LINE, SIZE PER PLAN	PW EAGLE CRESLINE	SCH 40 PVC	X/LX.X
	SLEEVE, SIZE 2 x PIPE DIA.	PW EAGLE CRESLINE	CLASS 200 PVC	X/LX.X

IRRIGATION MULTI-STREAM ROTARY HEAD SCHEDULE

SYMBOL	DESCRIPTION	GPM	PSI	RADIUS	DTL/SHEET
*NOTE: USE 6" POP-UP BODIES IN LAWN AREAS; AND 12" POP-UP BODIES IN PLANTING AREAS.					
	HUNTER PROS-XX*-PRS40-MP-CORNER	0.19	40	14'	X/LX.X
	HUNTER PROS-XX*-PRS40-MP-1000-90	0.19	40	14'	
	HUNTER PROS-XX*-PRS40-MP-1000-120	0.28	40	14'	
	HUNTER PROS-XX*-PRS40-MP-1000-180	0.37	40	14'	
	HUNTER PROS-XX*-PRS40-MP-1000-240	0.43	40	14'	
	HUNTER PROS-XX*-PRS40-MP-1000-270	0.57	40	14'	
	HUNTER PROS-XX*-PRS40-MP-1000-360	0.75	40	14'	
	HUNTER PROS-XX*-PRS40-MP-2000-90	0.40	40	19'	
	HUNTER PROS-XX*-PRS40-MP-2000-120	0.57	40	19'	
	HUNTER PROS-XX*-PRS40-MP-2000-180	0.74	40	19'	
	HUNTER PROS-XX*-PRS40-MP-2000-240	0.86	40	19'	
	HUNTER PROS-XX*-PRS40-MP-2000-270	1.10	40	19'	
	HUNTER PROS-XX*-PRS40-MP-2000-360	1.47	40	19'	
	HUNTER PROS-XX*-PRS40-MP-3000-90	0.86	40	30'	
	HUNTER PROS-XX*-PRS40-MP-3000-180	1.82	40	30'	
	HUNTER PROS-XX*-PRS40-MP-3000-210	2.12	40	30'	
	HUNTER PROS-XX*-PRS40-MP-3000-270	2.73	40	30'	
	HUNTER PROS-XX*-PRS40-MP-3000-360	3.64	40	30'	
	HUNTER PROS-XX*-PRS40-MP-LCS515	0.22	40	5'x15'	
	HUNTER PROS-XX*-PRS40-MP-LCS515	0.22	40	5'x15'	
	HUNTER PROS-XX*-PRS40-MP-SS530	0.44	40	5'x30'	

IRRIGATION NOTES

1. THE CONTRACTOR SHALL INSPECT THE SITE AND VERIFY CONDITIONS AND DIMENSIONS PRIOR TO CONSTRUCTION. NOTIFY OWNER'S REPRESENTATIVE IMMEDIATELY OF ANY DISCREPANCIES AFFECTING SYSTEM PERFORMANCE PRIOR TO BEGINNING WORK.
2. INSTALL IRRIGATION SYSTEM IN ACCORDANCE WITH ALL APPLICABLE CODES AND ORDINANCES.
3. IRRIGATION LINES SHOWN WITHIN PAVED AREAS ARE FOR GRAPHIC CLARITY ONLY. IRRIGATION HEADS AND PIPES ARE TO BE PLACED WITHIN LANDSCAPED AREAS WITH THEIR LOCATIONS MODIFIED AS REQUIRED TO AVOID PLANT MATERIALS, UTILITIES AND OTHER OBSTRUCTIONS. PLACE LINES IN COMMON TRENCHES WHERE POSSIBLE.
4. COORDINATE ALL IRRIGATION WORK WITH OTHER TRADES INVOLVED. COORDINATE IRRIGATION P.O.C. AND LOCATION OF AUTOMATIC CONTROLLER.
5. ALL VALVE BOXES WILL BE PLACED IN A MANNER WHICH FACILITATES ACCESS FOR MAINTENANCE. LOCATE VALVE BOXES IN PLANTING AREAS WHEREVER POSSIBLE. SIZE BOXES TO ACCOMMODATE COMPLETE VALVE ASSEMBLY INCLUDING UNIONS.
6. ALL COMPONENTS OF IRRIGATION SYSTEM SHALL BE INSTALLED AND ADJUSTED TO PROVIDE ADEQUATE COVERAGE AND ELIMINATE OVERSPRAY ONTO BUILDINGS, ROADS AND WALKWAYS. CONTRACTOR IS RESPONSIBLE FOR PROVIDING A COMPLETE WORKING SYSTEM.
7. CONTRACTOR SHALL VERIFY STATIC PRESSURE AT APPROXIMATELY 75-85* P.S.I. AT THE P.O.C. PRIOR TO COMMENCING WORK. NOTIFY OWNER'S REPRESENTATIVE IMMEDIATELY IF ACTUAL FIELD DATA DIFFERS FROM THIS INFORMATION.
8. THIS SYSTEM REQUIRES A MINIMUM PRESSURE OF 40* P.S.I. AT THE SPRAY HEADS. HEAD LAYOUT AND ZONES ARE BASED ON THIS DATA AND DATA SHOWN IN IRRIGATION SCHEDULE. NOTIFY THE OWNERS REPRESENTATIVE PRIOR TO COMMENCING WORK IF ACTUAL FIELD DATA DIFFERS FROM THIS INFORMATION.
9. IRRIGATION LATERALS ARE SIZED AT VALVE AND CONTINUING IN DIRECTION OF FLOW. REDUCTIONS IN PIPE SIZE ARE LABELED BEGINNING DOWNSTREAM OF NEAREST FITTING. ALL LATERALS ARE MINIMUM 3/4" OR SAME SIZE AS NEAREST UPSTREAM PIPE.
10. INSTALL ALL IRRIGATION PIPES IN PVC SLEEVES BELOW ALL PAVED SURFACES. COORDINATE PLACEMENT OF SLEEVES WITH APPLICABLE TRADES.
11. GRADE MAIN AND LATERAL LINES TO DRAIN. PLACE MANUAL DRAINS AT LOW POINT IN MAINLINES.

VALVE KEY:

0.00	GALLONS PER MINUTE
X | X.X"	VALVE SIZE
X	CONTROLLER STATION NUMBER

LATERAL LINE SIZING CHART

SCHEDULE 40 PVC

3/4"	UP TO 8 GPM	2"	UP TO 50 GPM
1"	UP TO 12 GPM	2-1/2"	UP TO 70 GPM
1-1/2"	UP TO 30 GPM		

NOTE: VELOCITY THROUGH PIPE IS NOT TO EXCEED 4.5 FEET PER SECOND (FPS) IN ACCORDANCE WITH INDUSTRY STANDARD. PRESSURE LOSS DUE TO PIPE FRICTION IN ANY ONE CIRCUIT IS NOT TO EXCEED 10% OF AVAILABLE STATIC PRESSURE.

KEY NOTES

1. IRRIGATION LINES SHOWN IN PAVED AREA FOR GRAPHIC CLARITY ONLY; INSTALL IN ADJACENT LANDSCAPE AREA.
2. EQUIPMENT SHOWN IN PAVED OR LAWN AREAS FOR GRAPHIC CLARITY ONLY; INSTALL IN VALVE BOX IN ADJACENT SHRUB AND GROUNDCOVER AREA.
3. PULL 12 CONTROL WIRES; 2 SPARE WIRES; AND 1 COMMON WIRE FROM CONTROLLER 'A' TO THIS LOCATION FOR PHASE 2 IRRIGATION.
4. STUB-OUT MAINLINE IN STANDARD VALVE BOX FOR FUTURE PHASE 2 IRRIGATION.
5. CONTROLLER TO BE INSTALLED IN MECHANICAL ROOM OF BUILDING, COORDINATE WITH ELECTRICAL AND MECHANICAL.

NOT FOR CONSTRUCTION

CITY OF BAINBRIDGE ISLAND
280 MADISON AVE. NORTH
BAINBRIDGE ISLAND, WA 98110

WALKER | MACY

EAGLE HARBOR WATERFRONT PARK
BAINBRIDGE ISLAND, WA

PROJECT NUMBER: P3119.01
DRAWN BY: KH
REVIEWED BY: CJ/DO
PHASE: 80% CONSTRUCTION DOCUMENTS
ISSUE DATE: 06/17/2015
REVISIONS:

IRRIGATION SCHEDULE

L500

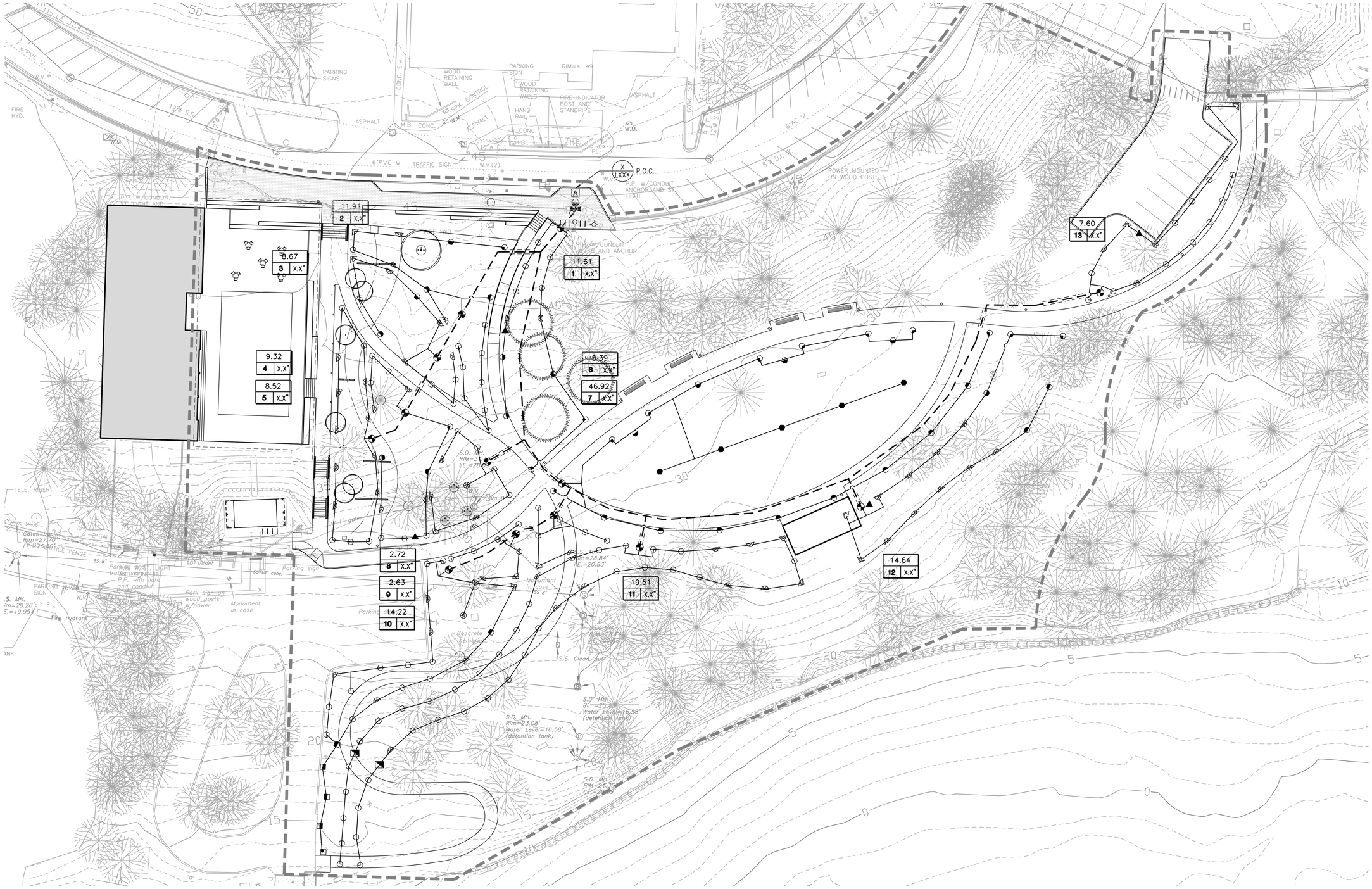

NOT FOR CONSTRUCTION

0 5 10 20 40
SCALE: 1" = 20'-0"

NORTH

CITY OF BAINBRIDGE ISLAND

280 MADISON AVE. NORTH
BAINBRIDGE ISLAND, WA 98110

WALKER | MACY

EAGLE HARBOR WATERFRONT PARK

BAINBRIDGE ISLAND, WA

PROJECT NUMBER: P3119.01

DRAWN BY:

REVIEWED BY:

PHASE:
80% CONSTRUCTION DOCUMENTS

ISSUE DATE:
06/17/2015

REVISIONS:

IRRIGATION PLAN

L501

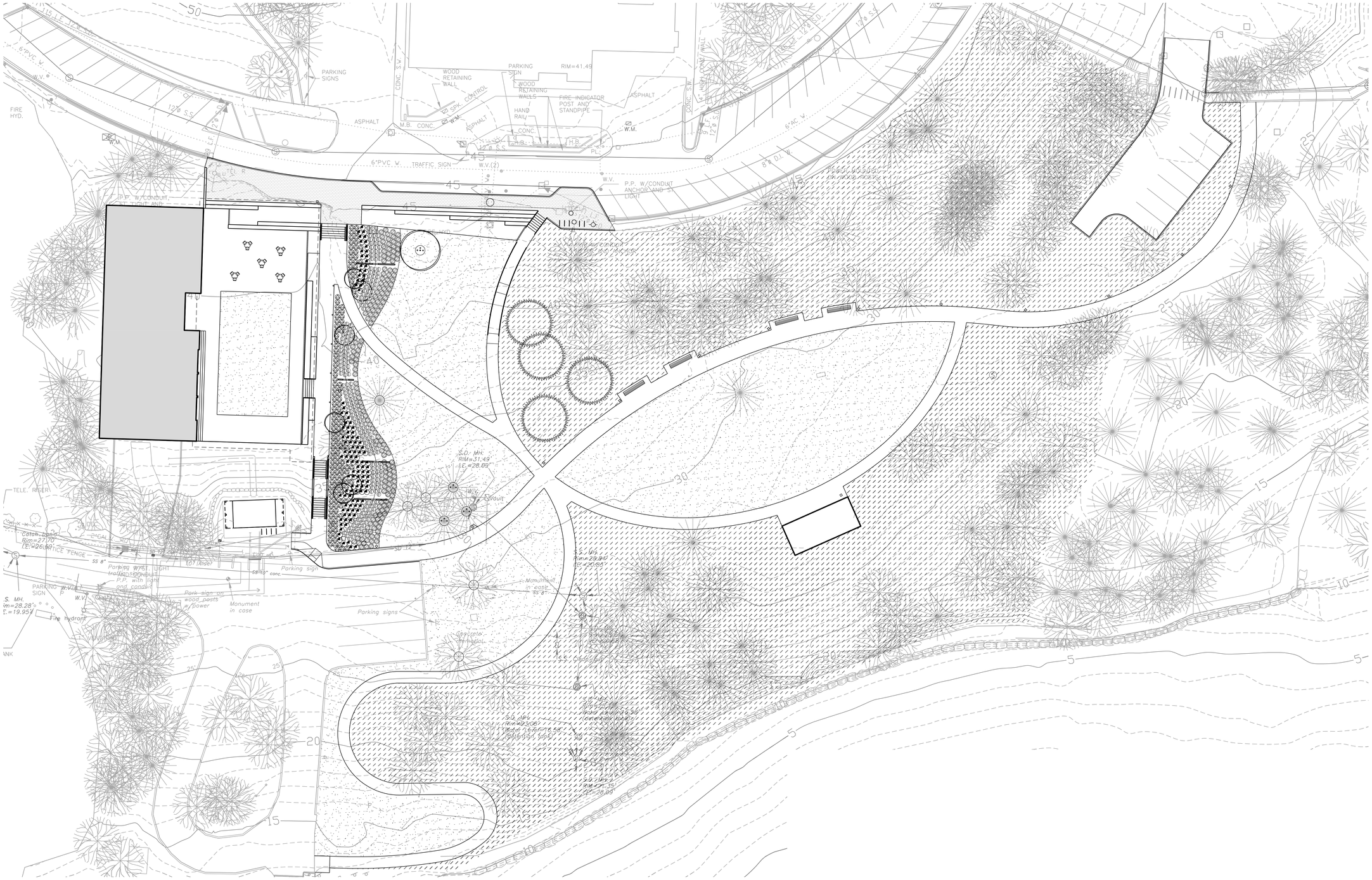

PLANTING NOTES

1. CONTRACTOR TO VERIFY LOCATION OF EXISTING TREES INDICATED TO REMAIN PRIOR TO SOIL PREPARATION. PROTECT ALL TREES AND SHRUBS INDICATED TO REMAIN. COORDINATE WITH THE OWNER'S REPRESENTATIVE.

2. PLANTING AREAS TO BE SUFFICIENTLY CLEANED OF ALL CONSTRUCTION MATERIALS, INCLUDING IMPORTED ROCK, TO THE SATISFACTION OF THE OWNER'S REPRESENTATIVE BEFORE BEGINNING ANY LANDSCAPE WORK.

3. IDENTIFY ALL PLANTING AREAS IN FIELD WITH WHITE FIELD-MARKING CHALK OR APPROVED EQUAL. PLANTING BEDS TO BE ADJUSTED AND APPROVED BY OWNER'S REPRESENTATIVE PRIOR TO PLANT LOCATION.

4. FOR PLANTING OCCURRING IN MASSES OF SAME SPECIES PLANT, LABELING REFERS TO ALL ADJACENT IDENTICAL SYMBOLS. REFER TO DETAILS AND LEGEND FOR SPACING INFORMATION.

5. THE OWNER'S REPRESENTATIVE WILL APPROVE INDIVIDUAL PLANT MATERIAL AND LOCATION OF PLANT MATERIAL PRIOR TO INSTALLATION. REFER TO SPECIFICATIONS FOR PROCEDURE.

6. SHRUBS AND GROUNDCOVER TO BE PLANTED A MINIMUM OF ONE HALF THEIR ON CENTER SPACING AWAY FROM PAVEMENT EDGES; UNLESS OTHERWISE NOTED.

7. PROVIDE ROOT BARRIER AROUND ALL TREES WITHIN 5' OF PAVING, CURBS, WALLS, BUILDINGS, UTILITY DUCTS AND OTHER APPURTENANCES.

8. PLANT QUANTITIES INDICATED ARE FOR THE CONVENIENCE OF THE CONTRACTOR ONLY. CONTRACTOR IS RESPONSIBLE FOR PROVIDING PLANTS IN QUANTITIES AND LOCATIONS SHOWN ON DRAWINGS.

9. PROVIDE JUTE NETTING ON ALL SLOPES WITH GRADIENT OF 3:1 OR GREATER AS DIRECTED IN THE FIELD BY THE OWNER'S REPRESENTATIVE. STAPLE FABRIC TO GROUND WITH METAL STAKES AT 4' O.C.

KEY NOTES

1. XXX...
2. XXX...
3. XXX...

LEGEND

- WATER QUALITY PLANTINGS STORM WATER DETENTION
- SEED MIX A
- SEED MIX B
- IRRIGATED PLANTING AREAS
- EXISTING TREES
- PROPOSED TREES

PLANT LIST

SYMBOL	ABBREVIATION	BOTANICAL NAME	COMMON NAME	SIZE	COMMENTS
		EVERGREEN TREES			
				6-8 FT.	
		DECIDUOUS TREES			
	ARFR	ACER RUBRUM 'FRANKSRED'	RED SUNSET MAPLE	2" CAL.	BRANCHED AT 6'-0"
		SHRUBS			
	MAAQ	MAHONIA AQUIFOLIUM COMPACTA	COMPACT OREGON GRAPE HOLLY	#3	
	SBPT	SPIRAEA BETULIFOLIA 'TOR'	BIRCH-LEAF SPIREA	#5	
		GROUNDCOVERS			
	COSE	CORNUS SERICEA 'KELSEYI'	KELSEY'S DWARF RED-OSIER DOGWOOD	#1	
	JUPA	JUNCUS PATENS	RUSH	#1	

0 5 10 20 40
SCALE: 1" = 20'-0"

NORTH

NOT FOR CONSTRUCTION

CITY OF BAINBRIDGE ISLAND
280 MADISON AVE. NORTH
BAINBRIDGE ISLAND, WA 98110

WALKER | MACY

EAGLE HARBOR WATERFRONT PARK

BAINBRIDGE ISLAND, WA

PROJECT NUMBER: P3119.01
DRAWN BY: KH
REVIEWED BY: CJ/DO
PHASE: 80% CONSTRUCTION DOCUMENTS
ISSUE DATE: 06/17/2015
REVISIONS:

PLANTING PLAN

L601

NOTE:
VERTICAL HEIGHTS NOTED ARE NOMINAL TO ILLUSTRATE RELATIVE LOCALIZED HEIGHT DIFFERENCES. SEE GRADING PLAN FOR SPOT ELEVATIONS.

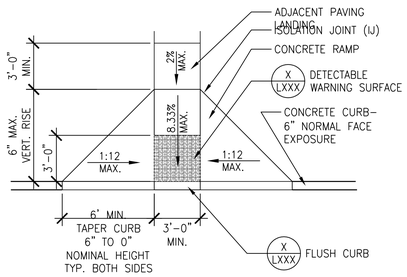

9 CURB RAMP
SCALE: 1/4" = 1'–0" SECTION

NOTE:
DO NOT ALLOW TRENCHING TO OCCUR WITHIN 24" OF AGGREGATE PAVING.

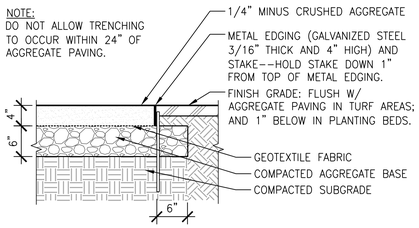

5 AGGREGATE PAVING
SCALE: 1" = 1'–0" SECTION

NOTE:
GROUT JOINT PROFILE SHALL BE NO GREATER THAN 1/4" DEEP AND NOT TRAP WATER.

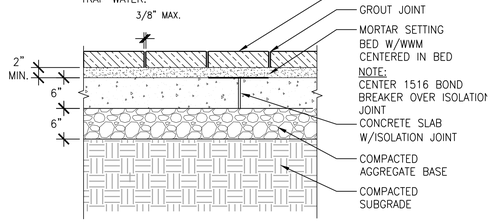

1 VEHICULAR CONCRETE UNIT PAVERS
SCALE: 1" = 1'–0" SECTION

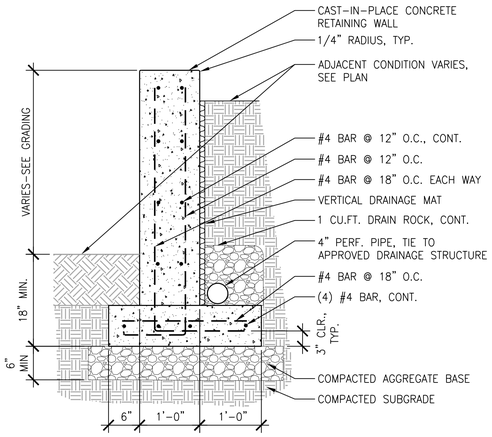

10 CONCRETE RETAINING WALL
SCALE: 1" = 1'–0" SECTION

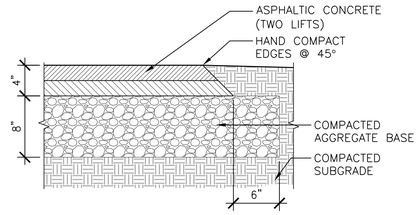

6 ASPHALT PAVING
SCALE: 1 1/2" = 1'–0" SECTION

NOTE:
NO TRENCHING WITHIN 24" OF PAVER EDGE IS ALLOWED

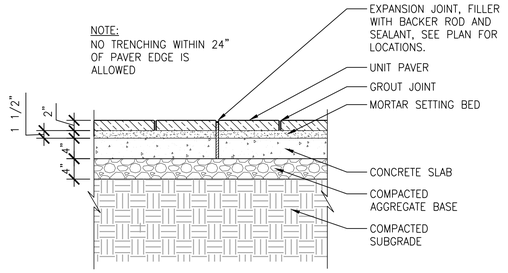

2 PEDESTRIAN CONCRETE UNIT PAVERS
SCALE: 1" = 1'–0" SECTION

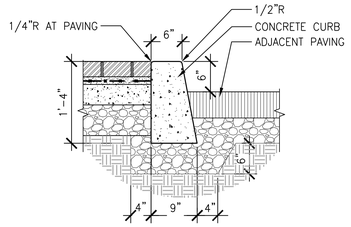

7 6" CONCRETE CURB
SCALE: 1" = 1'–0" SECTION

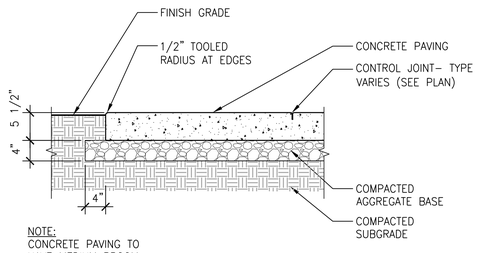

NOTE:
CONCRETE PAVING TO HAVE MEDIUM BROOM FINISH PERPENDICULAR TO DIRECTION OF TRAVEL U.N.O.

3 PEDESTRIAN CONCRETE PAVING
SCALE: 1" = 1'–0" SECTION

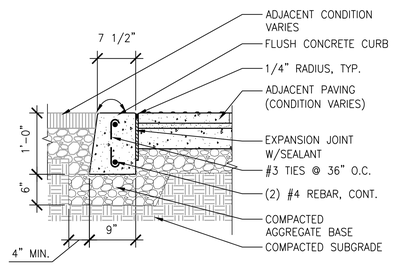

8 CONCRETE CURB FLUSH
SCALE: 1" = 1'–0" SECTION

NOTE:
SAWCUT JOINTS WHILE CONCRETE IS "GREEN".

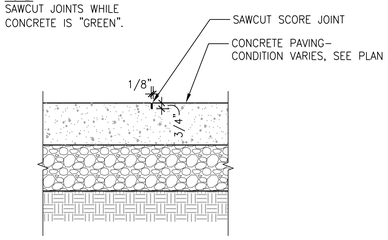

4 SCORE JOINT – SAW CUT
SCALE: 1 1/2" = 1'–0" SECTION

NOT FOR CONSTRUCTION

CITY OF BAINBRIDGE ISLAND
280 MADISON AVE. NORTH
BAINBRIDGE ISLAND, WA 98110

WALKER | MACY

EAGLE HARBOR WATERFRONT PARK
BAINBRIDGE ISLAND, WA

PROJECT NUMBER: P3119.01
DRAWN BY: KH
REVIEWED BY: CJ/DO
PHASE: 80% CONSTRUCTION DOCUMENTS
ISSUE DATE: 06/17/2015
REVISIONS:

SITE DETAILS

L700

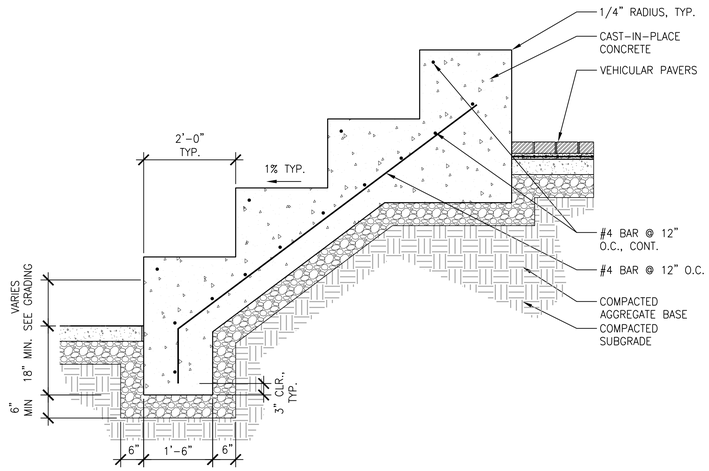

5 CONCRETE TERRACE TYPE A
SCALE: 3/4" = 1'-0"
SECTION

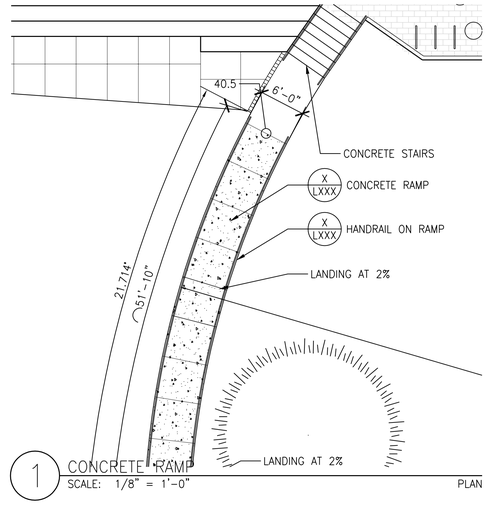

1 CONCRETE RAMP
SCALE: 1/8" = 1'-0"
PLAN

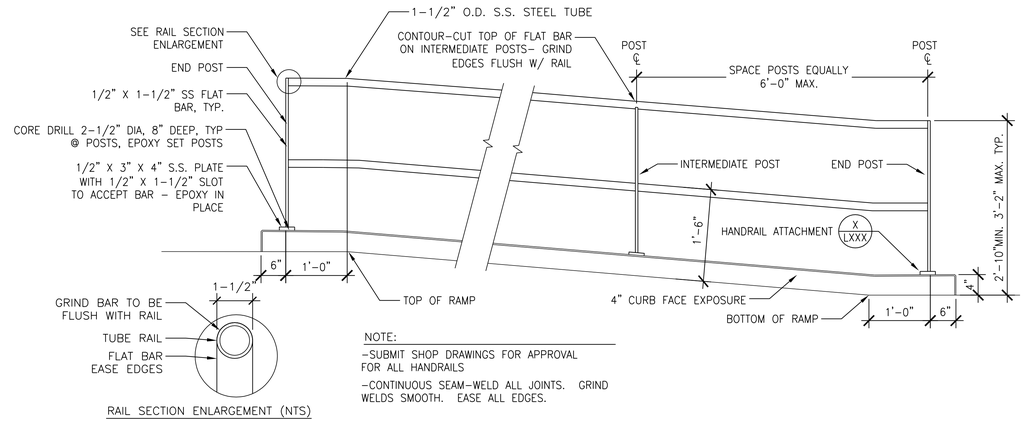

NOTE:
-SUBMIT SHOP DRAWINGS FOR APPROVAL FOR ALL HANDRAILS
-CONTINUOUS SEAM-WELD ALL JOINTS. GRIND WELDS SMOOTH. EASE ALL EDGES.

2 HANDRAIL ON RAMP
SCALE: 1" = 1'-0"
SECTION

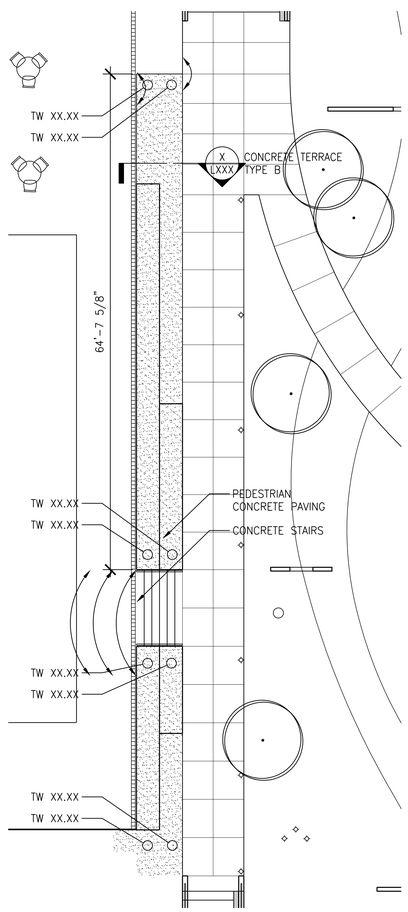

6 CONCRETE TERRACE TYPE B
SCALE: 1/8" = 1'-0"
PLAN

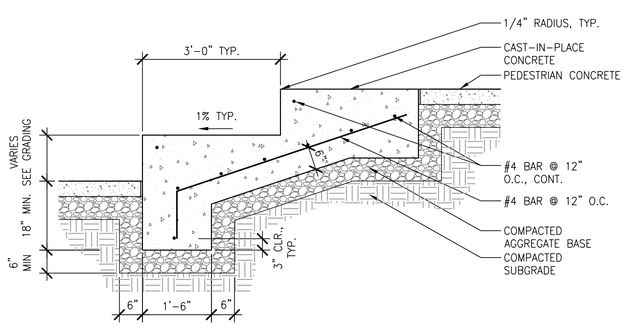

7 CONCRETE TERRACE TYPE B
SCALE: 3/4" = 1'-0"
SECTION

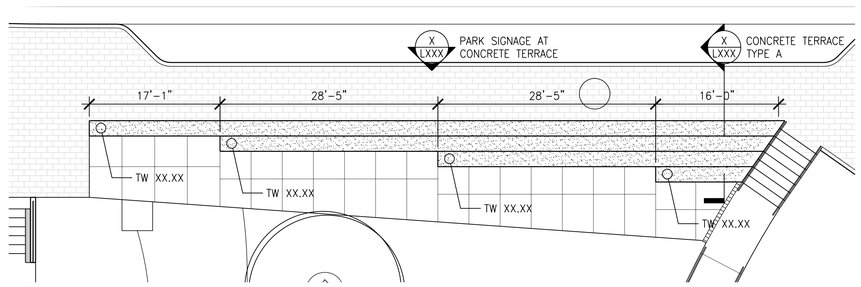

3 CONCRETE TERRACE TYPE A
SCALE: 1/8" = 1'-0"
PLAN

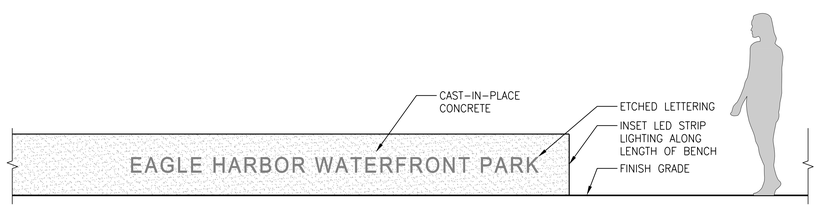

4 PARK SIGNAGE AT CONCRETE TERRACE
SCALE: 1/2" = 1'-0"
ELEVATION

NOT FOR CONSTRUCTION

CITY OF BAINBRIDGE ISLAND
280 MADISON AVE. NORTH
BAINBRIDGE ISLAND, WA 98110

WALKER | MACY

EAGLE HARBOR WATERFRONT PARK
BAINBRIDGE ISLAND, WA

PROJECT NUMBER: P3119.01
DRAWN BY:
REVIEWED BY:
PHASE: 80% CONSTRUCTION DOCUMENTS
ISSUE DATE: 06/17/2015
REVISIONS:

SITE DETAILS

L701

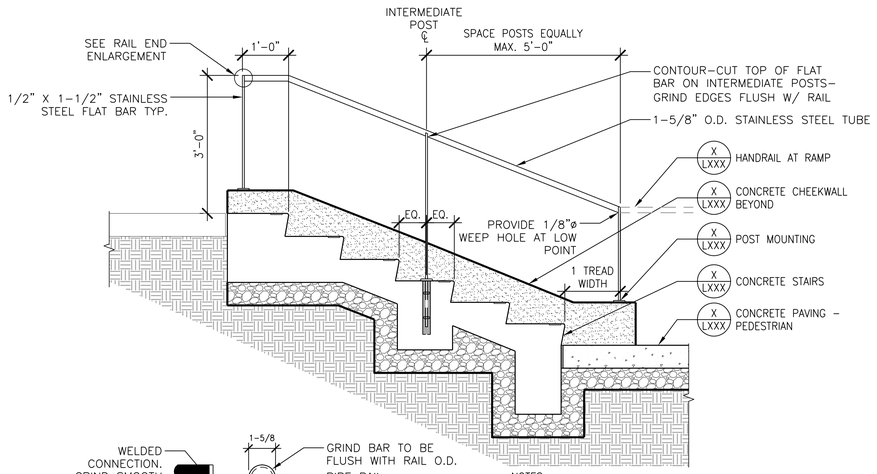

NOTES:
1. SUBMIT RAILING SHOP DRAWINGS FOR APPROVAL BY OWNER'S REPRESENTATIVE.
2. CONTINUOUS SEAM-WELD ALL JOINTS. GRIND WELDS SMOOTH. EASE ALL EDGES.
3. PROVIDE WEEP HOLES IN UNDERSIDE OF RAIL.

2 STAIR HANDRAIL TYPE A
SCALE: 3/4" = 1'-0" SECTION

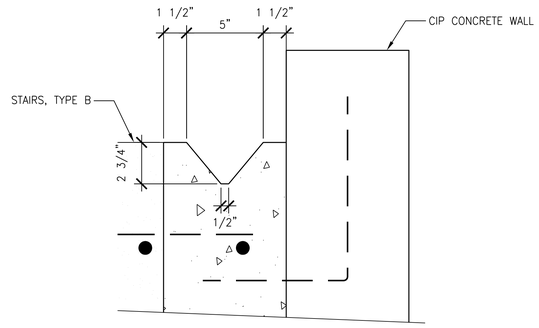

4 CONCRETE BIKE RUNNEL
SCALE: 3" = 1'-0" SECTION

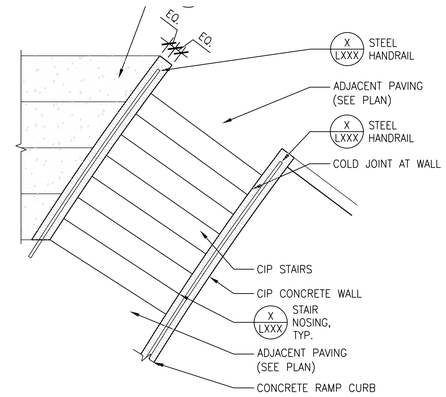

1 CONCRETE STAIRS TYPE A
SCALE: 3/8" = 1'-0" PLAN

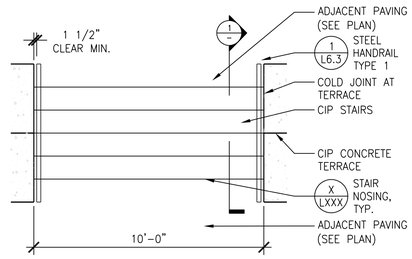

6 CONCRETE STAIRS TYPE C
SCALE: 3/8" = 1'-0" PLAN

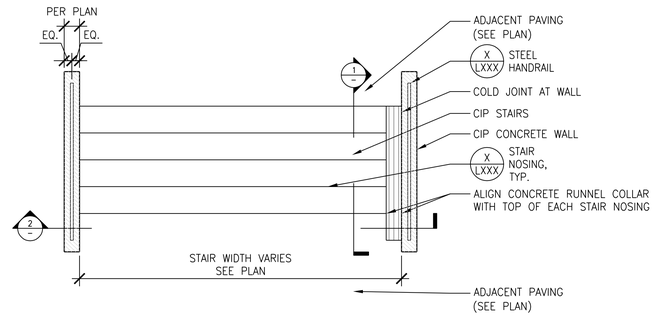

3 CONCRETE STAIRS TYPE B
SCALE: 3/8" = 1'-0" PLAN

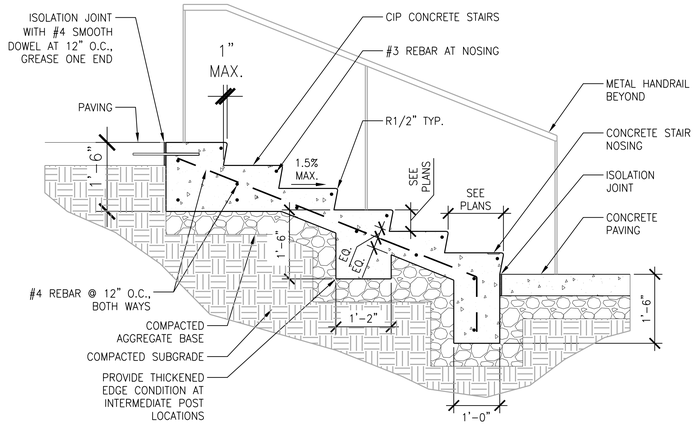

7 CONCRETE STAIRS TYPE C
SCALE: 3/4" = 1'-0" SECTION

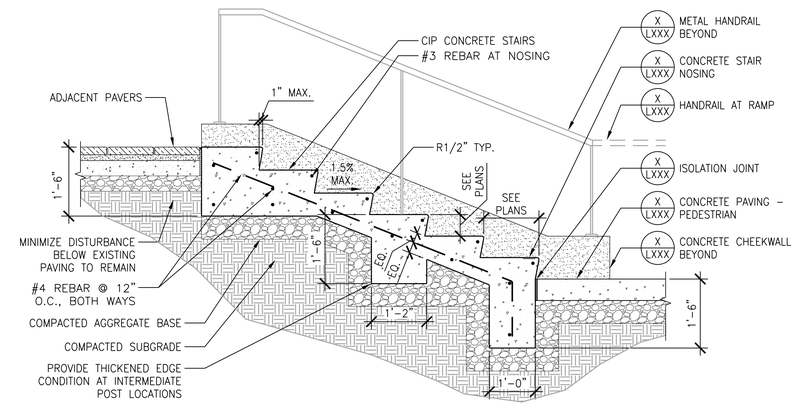

2 CONCRETE STAIRS TYPE A & TYPE B
SCALE: 3/4" = 1'-0" SECTION

NOTES:
1. REMOVE TOOL MARKS AND APPLY MEDIUM BROOM FINISH TO STAIR TREAD.
2. 1/2" RADIUS, TYPICAL ON ALL EXPOSED EDGES OF STAIR TREADS

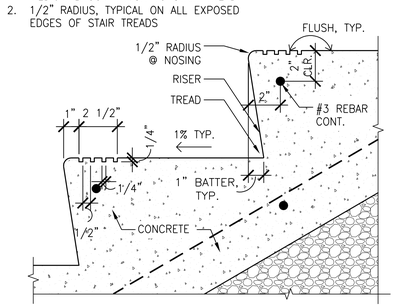

8 STAIR NOSING
SCALE: 3" = 1'-0" SECTION

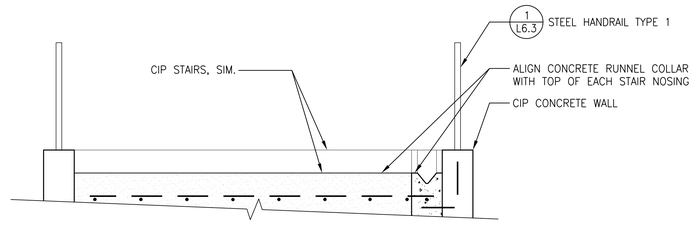

4 CONCRETE STAIRS TYPE B
SCALE: 3/4" = 1'-0" SECTION

NOT FOR CONSTRUCTION

CITY OF BAINBRIDGE ISLAND
280 MADISON AVE. NORTH
BAINBRIDGE ISLAND, WA 98110

WALKER | MACY

EAGLE HARBOR WATERFRONT PARK
BAINBRIDGE ISLAND, WA

PROJECT NUMBER: P3119.01
DRAWN BY: KH REVIEWED BY: CJ/DO
PHASE: 80% CONSTRUCTION DOCUMENTS
ISSUE DATE: 06/17/2015
REVISIONS:

SITE FURNISHING DETAILS

L702

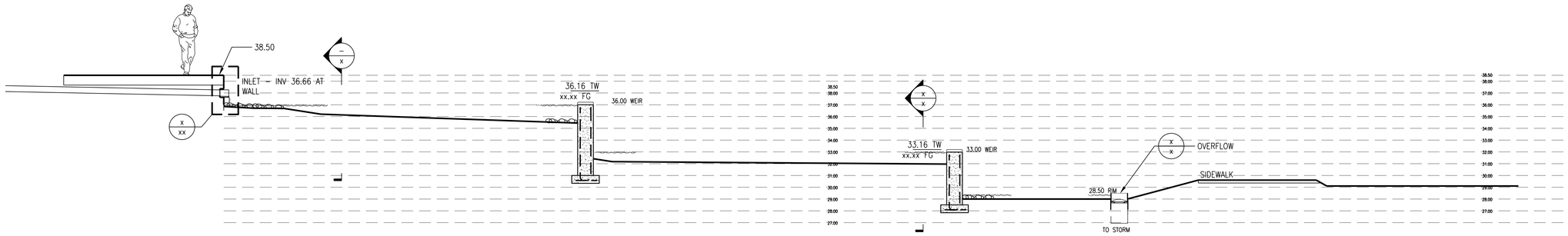

1 STORMWATER WEIRS
SCALE: 1/4" = 1'-0"
SECTION

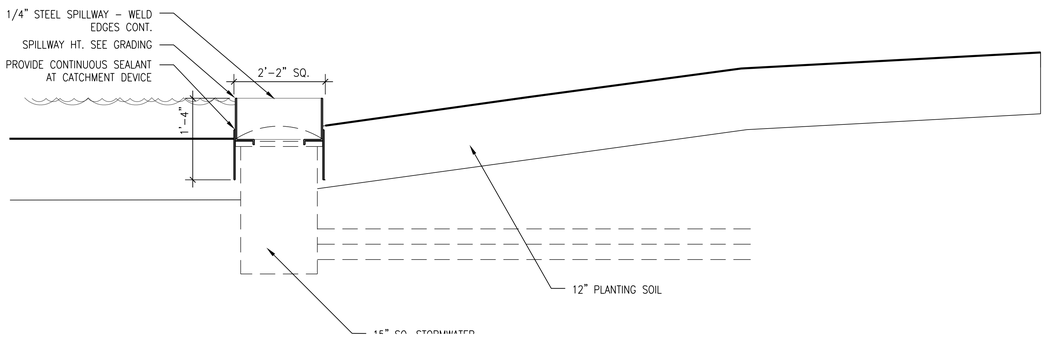

8 STORMWATER WEIRS
SCALE: 1" = 1'-0"
SECTION

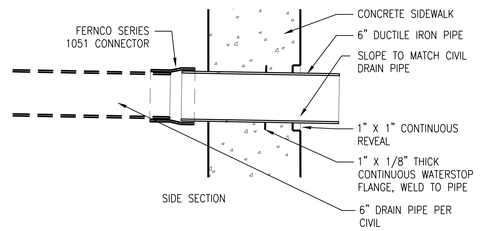

5 STORMWATER WEIRS
SCALE: 1 1/2" = 1'-0"
SECTION

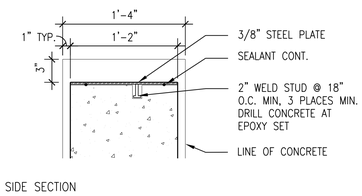

2 STORMWATER WEIRS
SCALE: 1 1/2" = 1'-0"
SECTION

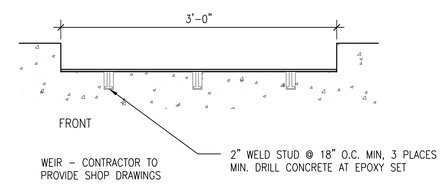

3 STORMWATER WEIRS
SCALE: 1 1/2" = 1'-0"
SECTION

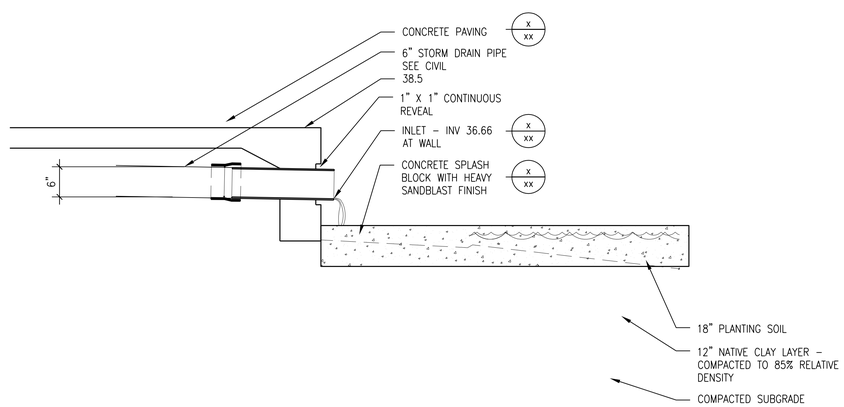

6 STORMWATER WEIRS
SCALE: 1" = 1'-0"
SECTION

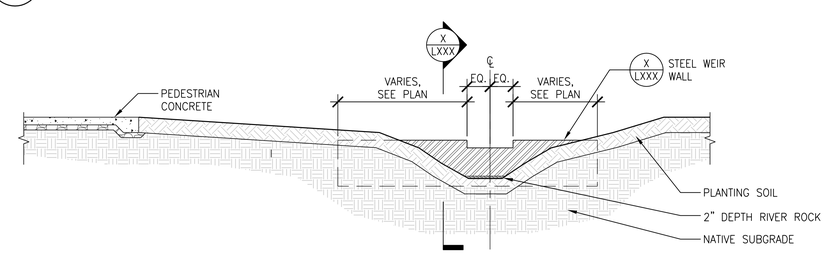

7 STORMWATER WEIRS
SCALE: 1/4" = 1'-0"
SECTION

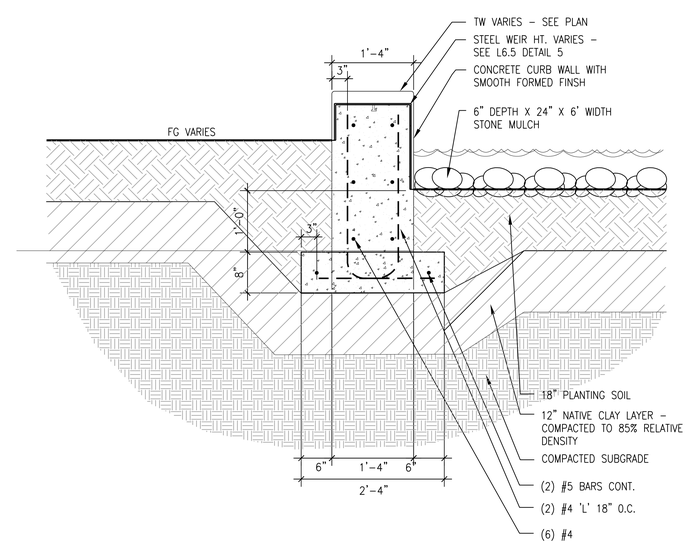

4 STORMWATER WEIRS
SCALE: 1" = 1'-0"
SECTION

NOT FOR CONSTRUCTION

CITY OF BAINBRIDGE ISLAND
280 MADISON AVE. NORTH
BAINBRIDGE ISLAND, WA 98110

WALKER | MACY

EAGLE HARBOR WATERFRONT PARK
BAINBRIDGE ISLAND, WA

PROJECT NUMBER:	P3119.01
DRAWN BY: KH	REVIEWED BY: CJ/DO
PHASE: 80% CONSTRUCTION DOCUMENTS	
ISSUE DATE: 06/17/2015	
REVISIONS:	

STORMWATER DETAILS

L703

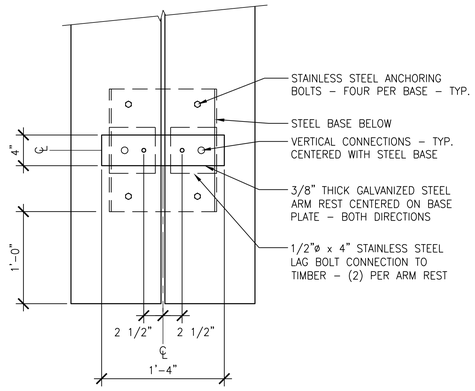

END DETAIL – PLAN

7 BOLLARD
SCALE: 1" = 1'-0" SECTION

4 WOOD BENCH
SCALE: 1 1/2" = 1'-0" SECTION

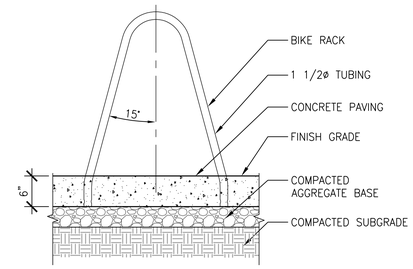

1 BIKE RACK
SCALE: 1" = 1'-0" SECTION

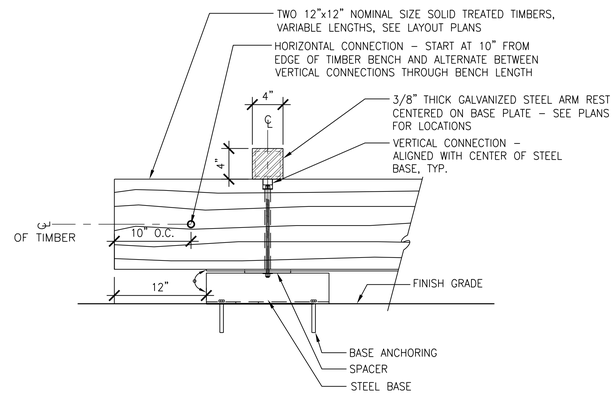

PARTIAL ELEVATION

5 WOOD BENCH
SCALE: 1 1/2" = 1'-0" SECTION

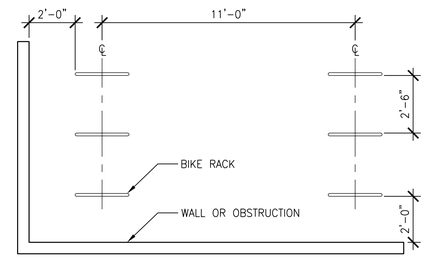

2 BIKE RACK LAYOUT
SCALE: 3/8" = 1'-0" SECTION

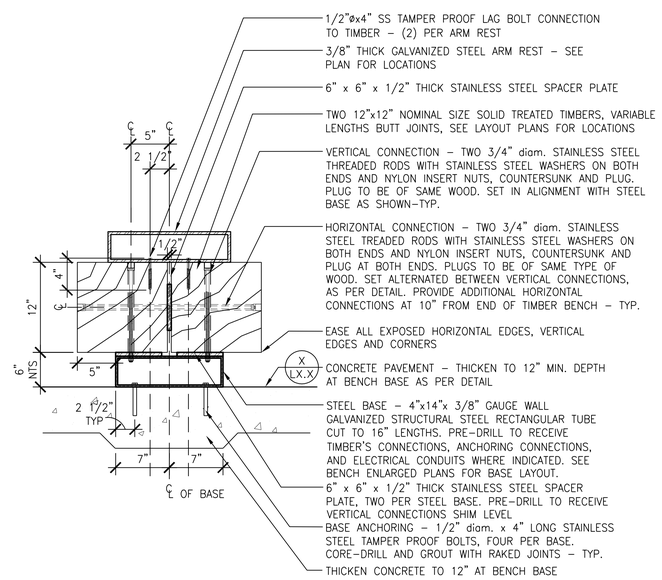

SECTION

6 WOOD BENCH
SCALE: 1 1/2" = 1'-0" SECTION

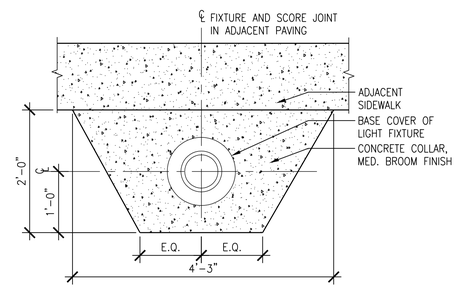

PLAN

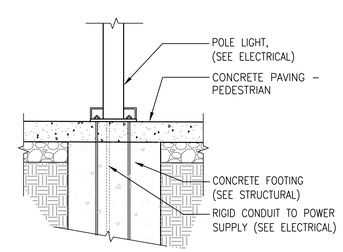

SECTION

3 CONCRETE COLLAR AT LIGHT FIXTURE BASE
SCALE: 1" = 1'-0" SECTION

NOT FOR CONSTRUCTION

CITY OF BAINBRIDGE ISLAND
280 MADISON AVE. NORTH
BAINBRIDGE ISLAND, WA 98110

WALKER | MACY

EAGLE HARBOR WATERFRONT PARK
BAINBRIDGE ISLAND, WA

PROJECT NUMBER: P3119.01
DRAWN BY: KH REVIEWED BY: CJ/DO
PHASE: 80% CONSTRUCTION DOCUMENTS
ISSUE DATE: 06/17/2015
REVISIONS:

SITE FURNISHING DETAILS

L704

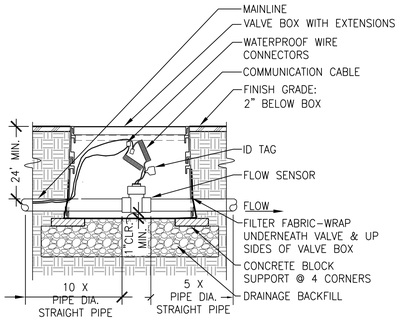

13 FLOW SENSOR
SCALE: 1" = 1'-0" SECTION

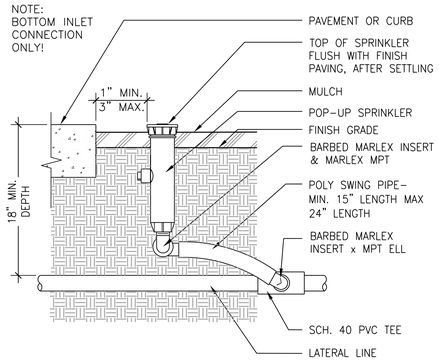

9 POP-UP SPRAY HEAD
SCALE: 1 1/2" = 1'-0" SECTION

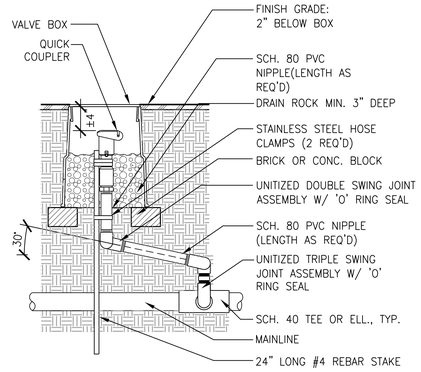

5 QUICK COUPLER
SCALE: 1" = 1'-0" SECTION

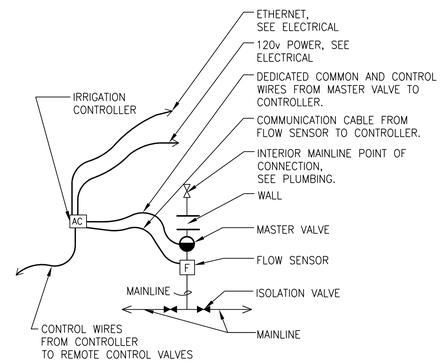

1 POINT OF CONNECTION
SCALE: 1/2" = 1'-0" SECTION

14 XXXXXX
SCALE: X" = 1'-0" SECTION

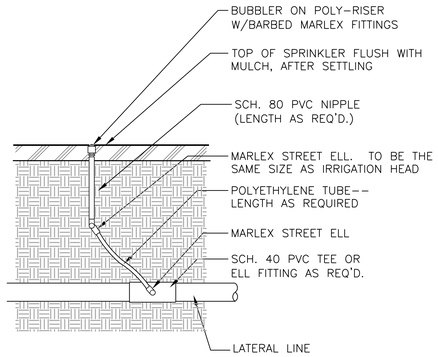

10 IRRIGATION BUBBLER
SCALE: 1 1/2" = 1'-0" SECTION

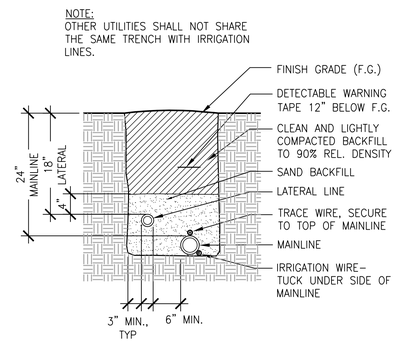

6 PIPE TRENCH
SCALE: 1" = 1'-0" SECTION

NOTES:
-ALL WIRE TO BE INSTALLED AS PER LOCAL ELECTRICAL CODE.
-VERIFY LOCATION PRIOR TO INSTALLATION.
-INSTALL CONTROLLER PER MANUFACTURER'S INSTRUCTIONS.

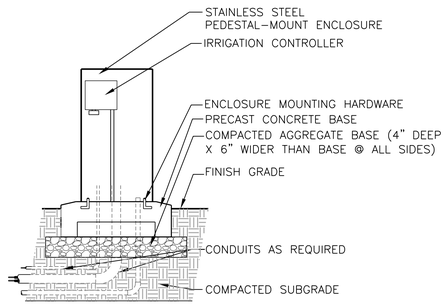

2 IRRIGATION CONTROLLER
SCALE: 1" = 1'-0" SECTION

15 XXXXXX
SCALE: X" = 1'-0" SECTION

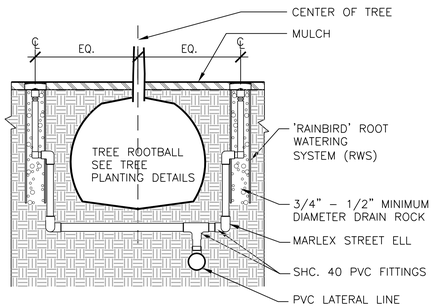

11 TREE BUBBLER
SCALE: 3/4" = 1'-0" SECTION

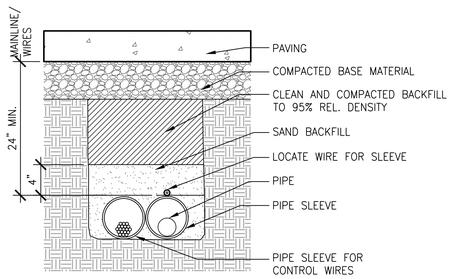

7 PIPE SLEEVE
SCALE: 1 1/2" = 1'-0" SECTION

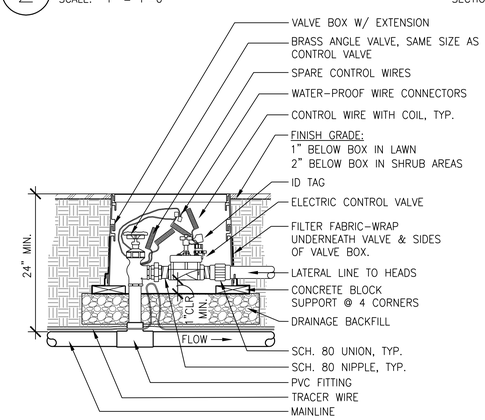

3 REMOTE CONTROL VALVE
SCALE: 1" = 1'-0" SECTION

16 XXXXXX
SCALE: X" = 1'-0" SECTION

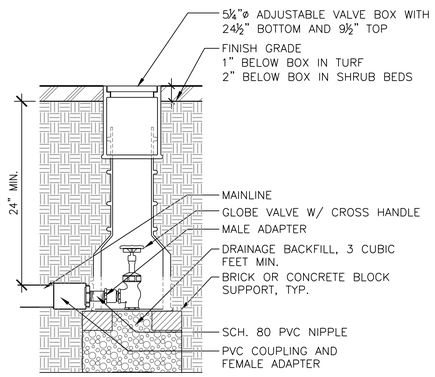

12 DRAIN VALVE
SCALE: 1 1/2" = 1'-0" SECTION

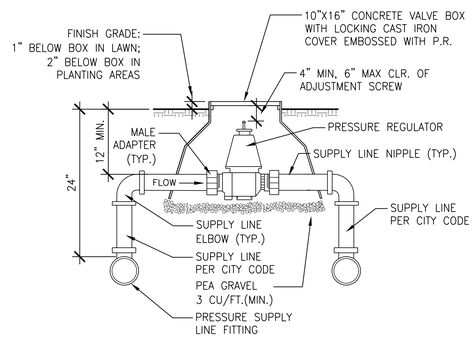

8 PRESSURE REGULATING VALVE
SCALE: 1 1/2" = 1'-0" SECTION

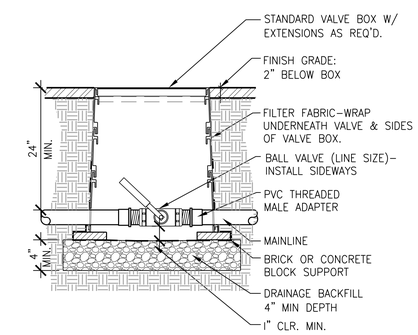

4 ISOLATION VALVE
SCALE: 1" = 1'-0" SECTION

NOT FOR CONSTRUCTION

CITY OF BAINBRIDGE ISLAND
280 MADISON AVE. NORTH
BAINBRIDGE ISLAND, WA 98110

WALKER | MACY

EAGLE HARBOR WATERFRONT PARK
BAINBRIDGE ISLAND, WA

PROJECT NUMBER: P3119.01
DRAWN BY: KH
REVIEWED BY: CJ/DO
PHASE: 80% CONSTRUCTION DOCUMENTS
ISSUE DATE: 06/17/2015
REVISIONS:

IRRIGATION DETAILS

L705

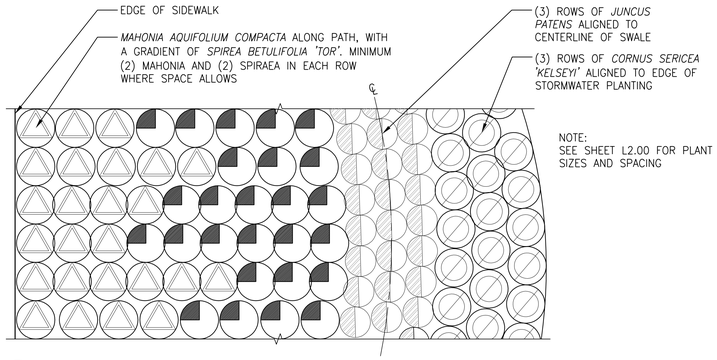

8 STORMWATER PLANTING ENLARGEMENT
SCALE: 1/4" = 1'-0" SECTION

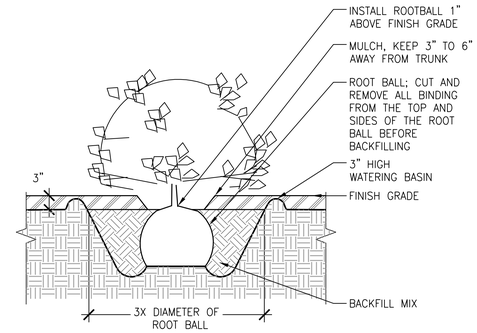

4 SHRUB & GROUNDCOVER PLANTING
SCALE: 3/4" = 1'-0" SECTION

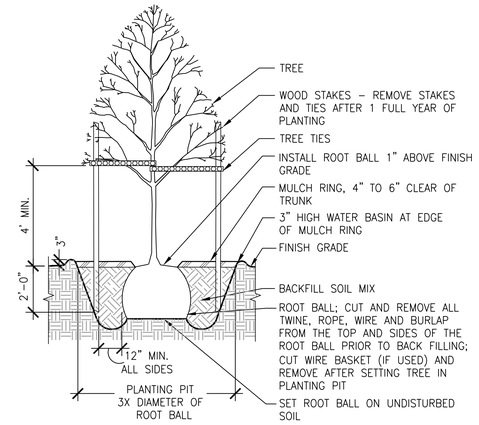

1 DECIDUOUS TREE PLANTING
SCALE: 3/8" = 1'-0" SECTION

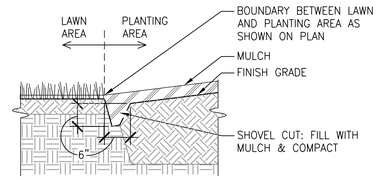

5 SHOVEL CUT
SCALE: 3/4" = 1'-0" SECTION

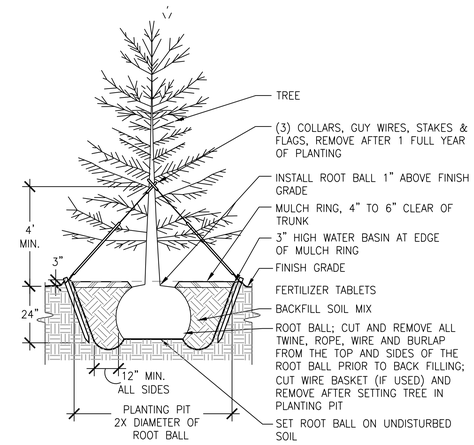

2 CONIFER TREE PLANTING
SCALE: 3/8" = 1'-0" SECTION

6 FILL AT EXISTING TREE
SCALE: 3/4" = 1'-0" SECTION

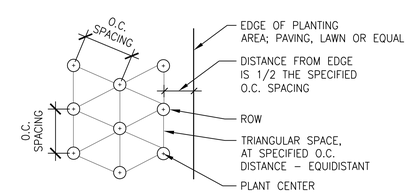

NOTE:
- SEE PLANT SCHEDULE FOR EACH PLANT'S APPROPRIATE O.C. SPACING.
- PLANTING PLAN SHOWING INDIVIDUAL LOCATION OF A SHRUB AND OR GROUND COVER TAKE PRECEDENT OVER THIS DETAIL.

3 SHRUB & GROUNDCOVER TRIANGULAR SPACING
SCALE: 3/4" = 1'-0" SECTION

7 LAWN AT TERRACE
SCALE: 3/4" = 1'-0" SECTION

NOT FOR CONSTRUCTION

CITY OF BAINBRIDGE ISLAND
280 MADISON AVE. NORTH
BAINBRIDGE ISLAND, WA 98110

WALKER | MACY

EAGLE HARBOR WATERFRONT PARK
BAINBRIDGE ISLAND, WA

PROJECT NUMBER: P3119.01
DRAWN BY: KH
REVIEWED BY: CJ/DO
PHASE: 80% CONSTRUCTION DOCUMENTS
ISSUE DATE: 06/17/2015
REVISIONS:

PLANTING DETAILS

L706

DOOR SCHEDULE

DOOR #	ROOM NAME	OPENING SIZE: W x H	FRAME TYPE	FRAME FIN.	DOOR TYPE	DOOR MAT.	DOOR FIN.	REMARKS
100.1	PICNIC PAVILION	8'–0" x 9'–0"	F1	PTD.	A	RESIN	MATTE	REFINISHABLE FINISH
101.2	PICNIC PAVILION	8'–0" x 9'–0"	F1	PTD.	A	RESIN	MATTE	REFINISHABLE FINISH
101	ELEC.	3'–4" x 8'–8 1/2"	–	–	B	MTL.	PTD.	FRAMELESS
101	STORAGE	4'–0" x 8'–8 1/2"	–	–	B	MTL.	PTD.	FRAMELESS

DOOR TYPE LEGEND

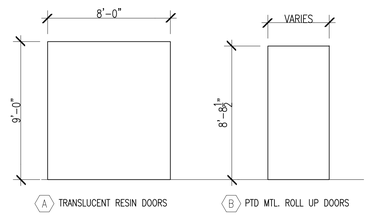

FRAME TYPE LEGEND

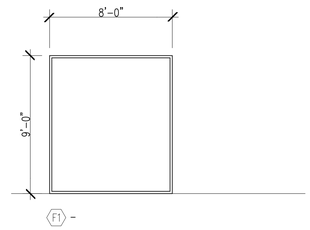

FINISH SCHEDULE

FINISH #	ROOM NAME	WALLS	FLOORS	BEAMS
P1	PICNIC PAVILION	TBD	TBD	TBD
P2	PICNIC PAVILION	TBD	TBD	TBD
P3	ELEC.	TBD	TBD	TBD
P4	STORAGE	TBD	TBD	TBD

LIGHTING SCHEDULE

ROOM #	ROOM NAME	FIXTURE COUNT	FIXTURE TYPE	BULB	FINISH
100	PICNIC PAVILION	6	4" IN GRADE UP LIGHT	LED	NATURAL BRASS
101	ELEC.	–	–	–	–
102	STORAGE	1	4' WALL MOUNT	LED	TBD

FURNITURE SCHEDULE *

ROOM #	ROOM NAME	COUNT	MAKE	MODEL	REMARKS
100	PICNIC PAVILION	TBD	TBD	TBD	–
101	ELEC.	–	–	–	–
102	STORAGE	–	–	–	–

*TO BE USED AS 'BASIS-OF-DESIGN'

DRAWING INDEX

ARCHITECTURAL
A0.0 SCHEDULES, ABBREV., SYMBOLS, NOTES
A2.0 FLOOR PLAN
A2.1 ROOF PLAN
A2.2 ADD. ALT. ROOF
A3.0 NORTH & EAST ELEVATIONS
A3.1 SOUTH & WEST ELEVATIONS
A4.0 SECTIONS
A4.1 SECTIONS

GENERAL NOTES

1. ALL WORK SHALL BE IN CONFORMANCE WITH APPLICABLE CODES AND LOCAL BUILDING REQUIREMENTS INCLUDING BUT NOT LIMITED TO THE 2012 EDITION OF THE IRC AND THE 2012 IBC, 2012 IFC, 2012 IECC.

2. ALL APPLICABLE CODES, ORDINANCES AND MINIMUM STRUCTURAL REQUIREMENTS TAKE PRECEDENCE OVER DRAWINGS AND NOTES.

3. CONTRACTOR SHALL VERIFY ALL DIMENSIONS SHOWN ON THE DRAWINGS BEFORE COMMENCING WITH THE WORK. ANY DISCREPANCIES SHALL BE BROUGHT TO THE ATTENTION OF THE OWNER AND THE ARCHITECT PRIOR TO STARTING ANY CONSTRUCTION OF THE AREA CONCERNED.

4. DIMENSIONS ARE TO FACE OF STUD, UNLESS NOTED OTHERWISE. DO NOT SCALE DRAWINGS. VERTICAL DIMENSIONS ARE TYPICALLY REFERENCED FROM STRUCTURAL SUBFLOOR, U.N.O.

5. WHERE ON ANY OF THE DRAWINGS OR DETAILS, A PORTION OF THE WORK IS SHOWN AND/OR DETAILED AND THE REMAINDER INDICATED IN OUTLINE, THE PARTS SHOWN AND/OR DETAILED SHALL APPLY TO ALL OTHER LIKE PORTIONS OF THE WORK.

6. PRIOR TO AND DURING THE WORK, CONTRACTOR SHALL VERIFY CONDITIONS; AND CONDITIONS INCONSISTENT OR PROBLEMATIC WITH REGARD TO THE INTENT OF THE DRAWINGS SHALL BE BROUGHT TO THE ATTENTION OF THE OWNER AND ARCHITECT PRIOR TO STARTING OR CONTINUING WORK IN THE AREA CONCERNED.

7. PROVIDE SUFFICIENT STRUCTURE/BLOCKING IN WALLS FOR SUPPORTING COUNTERS, CABINETS, ACCESSORIES ETC. AS REQUIRED.

8. ALL MATERIALS TO BE ASSUMED AS NEW UNLESS NOTED AS FOIC.

9. ALL WOOD IN CONTACT WITH CONCRETE TO BE PRESSURE TREATED, P.T.

10. CONTRACTOR TO VERIFY LOCATION OF ALL EXISTING UTILITIES THROUGHOUT SITE PRIOR TO EXCAVATION.

11. SAFETY GLAZING TO BE PROVIDED IN ACCORDANCE WITH IRC R308.

ABBREVIATIONS LIST (ABBREV. NOT LIMITED TO THIS LIST)

A.B.	ANCHOR BOLT
ADJ.	ADJUSTABLE/ADJACENT
A.F.F.	ABOVE FINISH FLOOR
BLDG.	BUILDING
BLKG.	BLOCKING
BOT.	BOTTOM
BTWN.	BETWEEN
BYD.	BEYOND
CL	CENTERLINE
CLG.	CEILING
CONC.	CONCRETE
C.I.	CAST IRON
℄	CENTER LINE
C.O.	CLEAN OUT
C.W.	COLD WATER
CAB.	CABINET
CLR.	CLEAR
CONST.	CONSTRUCTION
CONT.	CONTINUOUS
CTR.	CENTER
D.	DRAIN
DIA.	DIAMETER
DWG.	DRAWING
D.S.	DOWNSPOUT
DTL.	DETAIL
DIM.	DIMENSION
DN.	DOWN
DWR.	DRAWER
(E) OR EXIST.	EXISTING
E.W.	EACH WAY
EA.	EACH
ELEC.	ELECTRICAL
EXP.	EXPANSION/EXPOSED
EXT.	EXTERIOR
F.D.	FLOOR DRAIN
F.E.C.	FIRE EXTINGUISHER CABINET
F.M.C.	FLOOR MATERIAL CHANGE
FOIC	FURNISHED BY OWNER, INSTALLED BY CONTRACTOR
FOIO	FURNISHED BY OWNER INSTALLED BY OWNER
F.O.C.	FACE OF CONCRETE
F.O.M.	FACE OF MASONRY
F.O.S.	FACE OF STUD
FIN.	FINISH
FLR.	FLOOR
GA.	GAUGE
GALV.	GALVANIZED
GL	GLASS
G.W.B.	GYPSUM WALL BOARD
HB.	HOSE BIB
HR.	HOUR
HT.	HEIGHT
H.M.	HOLLOW METAL
H.W.	HOT WATER
HDR.	HEADER
HDWR.	HARDWARE
I.D.	INSIDE DIAMETER
INSUL.	INSULATION
INT.	INTERIOR
JT.	JOINT
MAX.	MAXIMUM
MECH.	MECHANICAL
MFR.	MANUFACTURER
MIN.	MINIMUM
MISC.	MISCELLANEOUS
MAT'L	MATERIAL
MTL.	METAL
MOD. BT.	MODIFIED BITUMEN
N.I.C.	NOT IN CONTRACT
N.T.S.	NOT TO SCALE
NO. OR #	NUMBER
O.C.	ON CENTER
O.D.	OUTSIDE DIAMETER
OPP.	OPPOSITE
O/	OVER
PLYD.	PLYWOOD
PL	PLATE
PLAM	PLASTIC LAMINATE
PTD.	PAINTED
R.	RADIUS
RCP	REFLECTED CEILING PLAN
REQD.	REQUIRED
R.O.	ROUGH OPENING
S.D.	SMOKE DETECTOR
S.S.	STAINLESS STEEL
SIM.	SIMILAR
SQ.	SQUARE
STD.	STANDARD
STL.	STEEL
STRUCT.	STRUCTURAL
T.O.C.	TOP OF CONCRETE
T.O.M.	TOP OF MASONRY
T.O.S.	TOP OF SLAB
T.O.S.F.	TOP OF SUBFLOOR
TYP.	TYPICAL
U.N.O.	UNLESS NOTED OTHERWISE
V.	VERTICAL
VWP.	VENEER WOOD PANEL
VFY.	VERIFY
V.I.F.	VERIFY IN FIELD
WD.	WOOD
W/	WITH
W/I	WITHIN
W/O	WITHOUT
W.C.	WATER CLOSET
W.GL.	WIRE GLASS
W.M.	WIRE MESH
W.P.	WATERPROOF
W.W.M.	WELDED WIRE MESH
WGWB	WATER RESIST. GYPSUM WALL BOARD

SYMBOLS

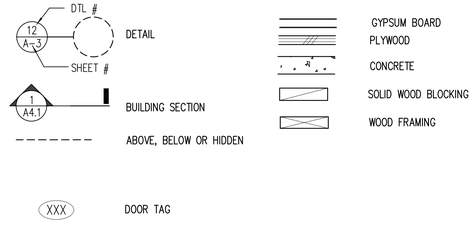

NOT FOR CONSTRUCTION

CITY OF BAINBRIDGE ISLAND
280 MADISON AVE. NORTH
BAINBRIDGE ISLAND, WA 98110

WALKER | MACY

PATANO STUDIO ARCHITECTURE

EAGLE HARBOR WATERFRONT PARK
BAINBRIDGE ISLAND, WA

PROJECT NUMBER: P3119.01
DRAWN BY:
REVIEWED BY:
PHASE: COORDINATION SET
ISSUE DATE: 06/24/2015
REVISIONS:

SCHEDULES, ABBREV., SYMBOLS, NOTES

A0.0

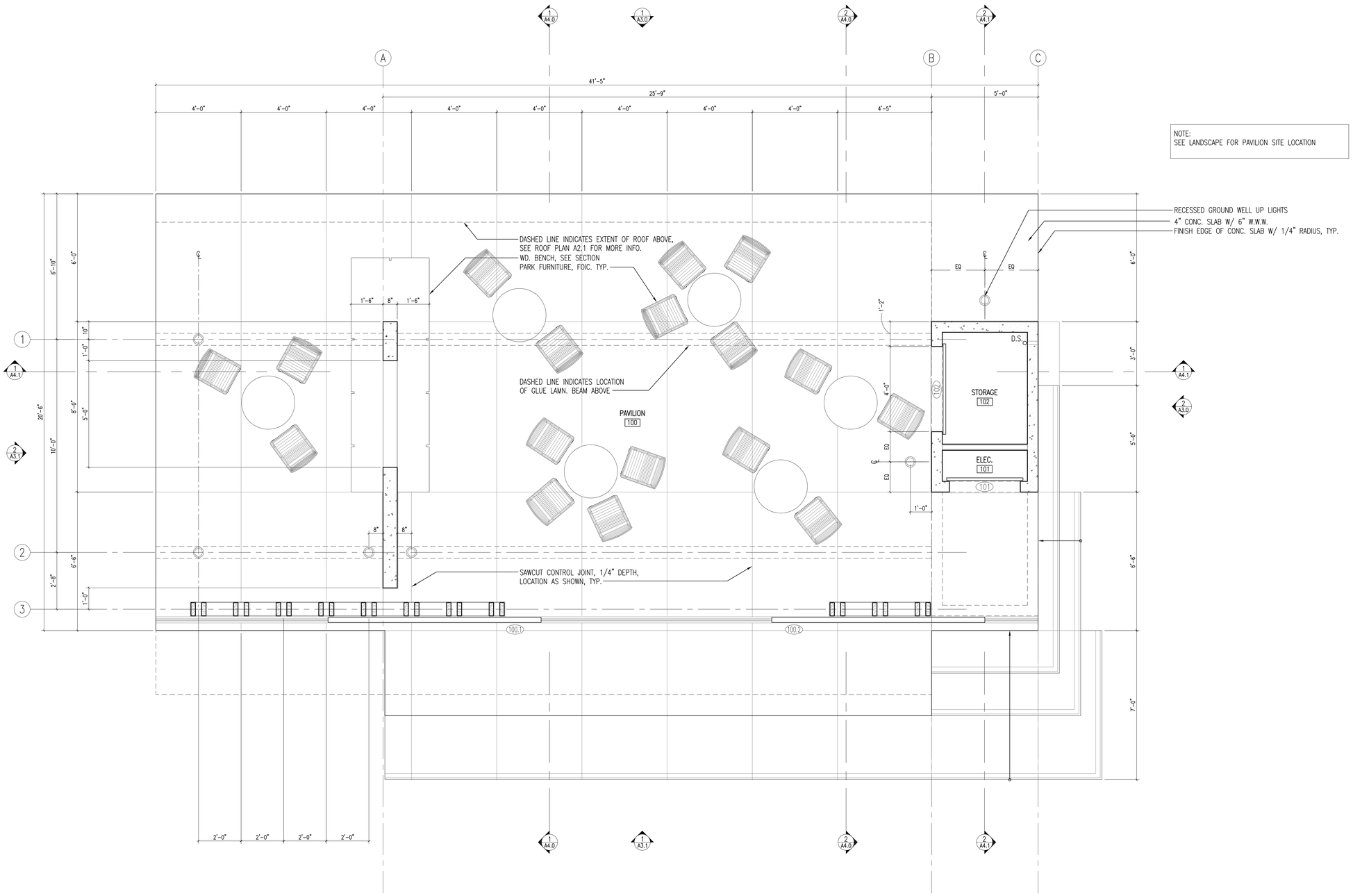

1 FLOOR PLAN
SCALE: 1/2" = 1'-0"

NOT FOR CONSTRUCTION

CITY OF BAINBRIDGE ISLAND
280 MADISON AVE. NORTH
BAINBRIDGE ISLAND, WA 98110

WALKER | MACY

PATANO STUDIO ARCHITECTURE

EAGLE HARBOR WATERFRONT PARK

BAINBRIDGE ISLAND, WA

PROJECT NUMBER: P3119.01
DRAWN BY:
REVIEWED BY:
PHASE:
COORDINATION SET
ISSUE DATE:
06/24/2015
REVISIONS:

FLOOR PLAN

A2.0

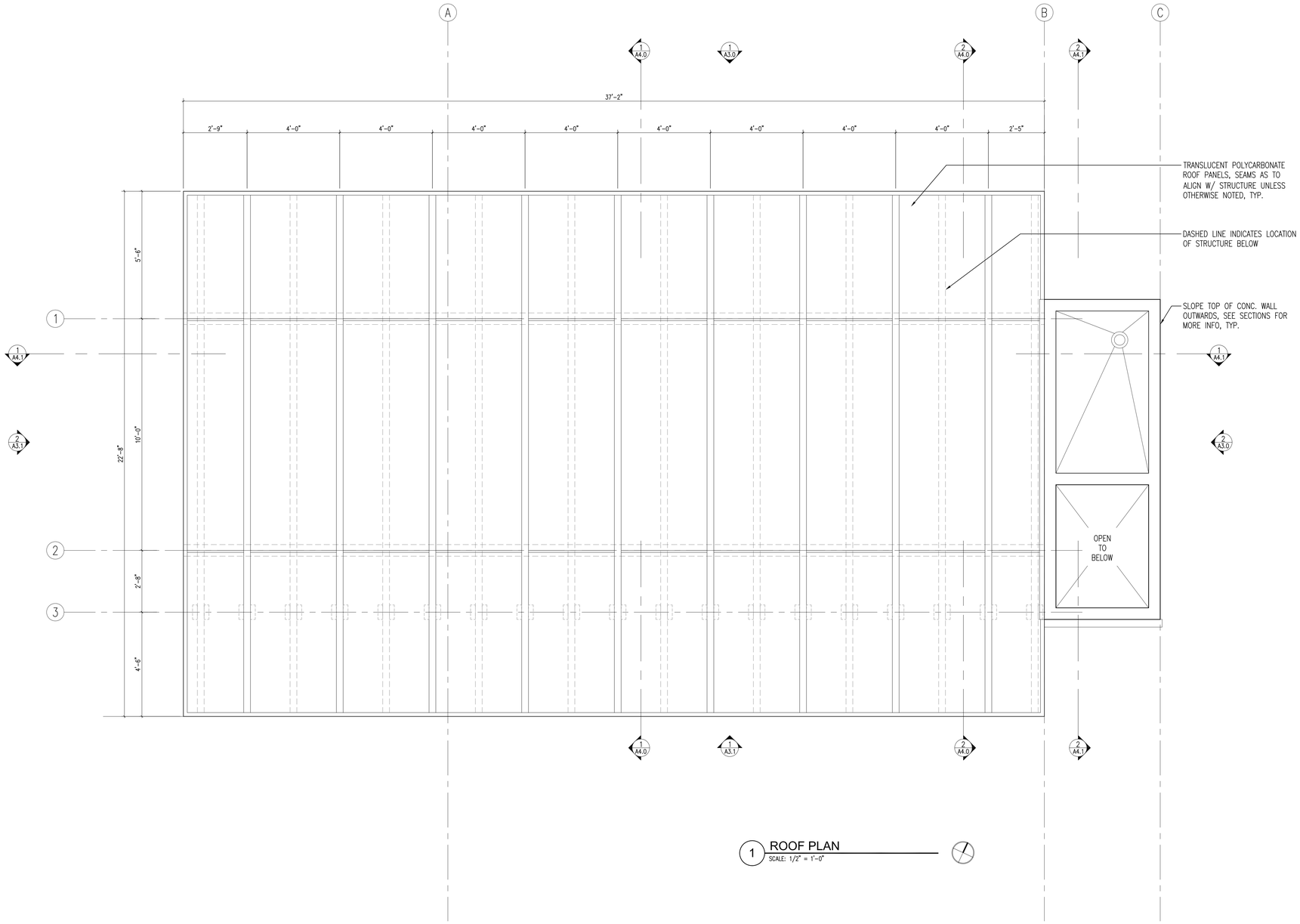

1 ROOF PLAN
SCALE: 1/2" = 1'-0"

NOT FOR CONSTRUCTION

CITY OF BAINBRIDGE ISLAND
280 MADISON AVE. NORTH
BAINBRIDGE ISLAND, WA 98110

WALKER | MACY

PATANO STUDIO ARCHITECTURE

EAGLE HARBOR WATERFRONT PARK
BAINBRIDGE ISLAND, WA

PROJECT NUMBER: P3119.01
DRAWN BY:
REVIEWED BY:
PHASE: COORDINATION SET
ISSUE DATE: 06/24/2015
REVISIONS:

ROOF PLAN

A2.1

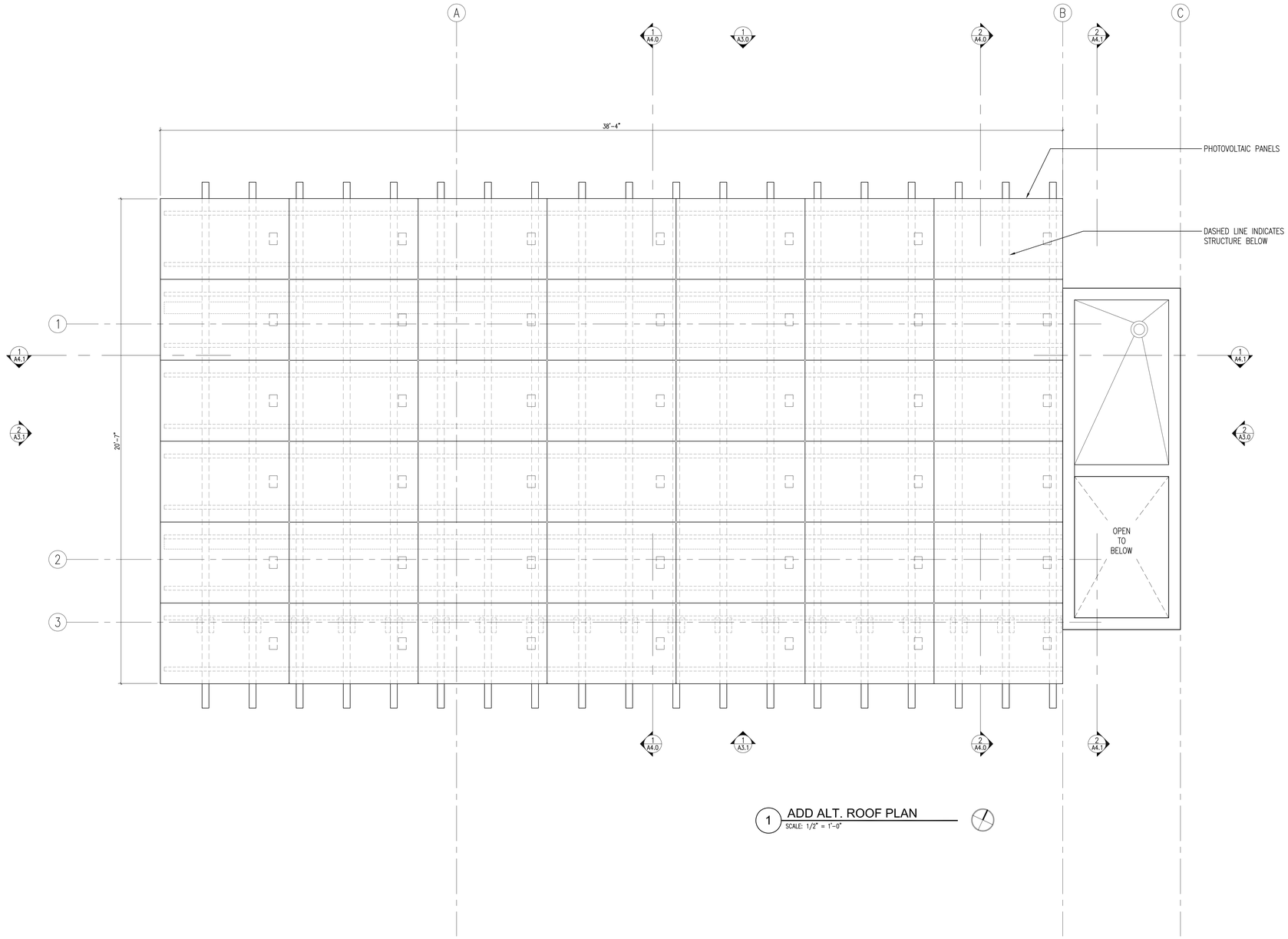

1 ADD ALT. ROOF PLAN
SCALE: 1/2" = 1'-0"

NOT FOR CONSTRUCTION

CITY OF BAINBRIDGE ISLAND
280 MADISON AVE. NORTH
BAINBRIDGE ISLAND, WA 98110

WALKER | MACY

PATANO STUDIO ARCHITECTURE

EAGLE HARBOR WATERFRONT PARK
BAINBRIDGE ISLAND, WA

PROJECT NUMBER: P3119.01
DRAWN BY:
REVIEWED BY:
PHASE: COORDINATION SET
ISSUE DATE: 06/24/2015
REVISIONS:

ADD ALT. ROOF PLAN
A2.2

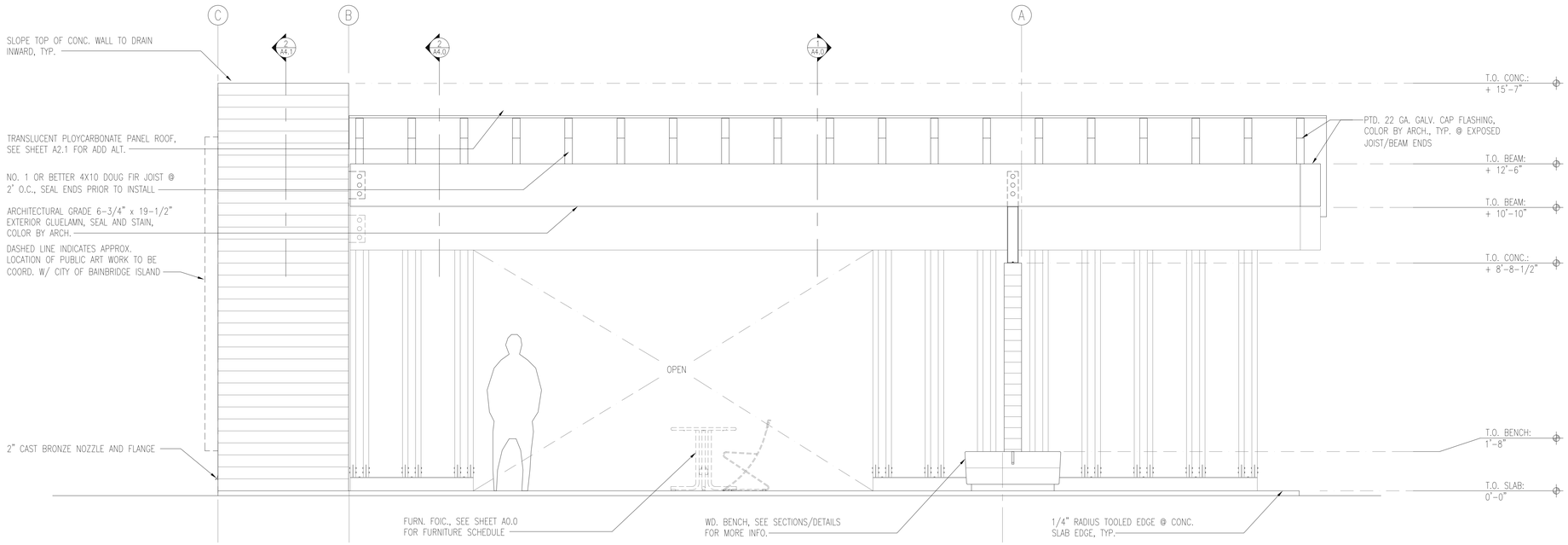

1 NORTH ELEVATION
SCALE: 1/2" = 1'-0"

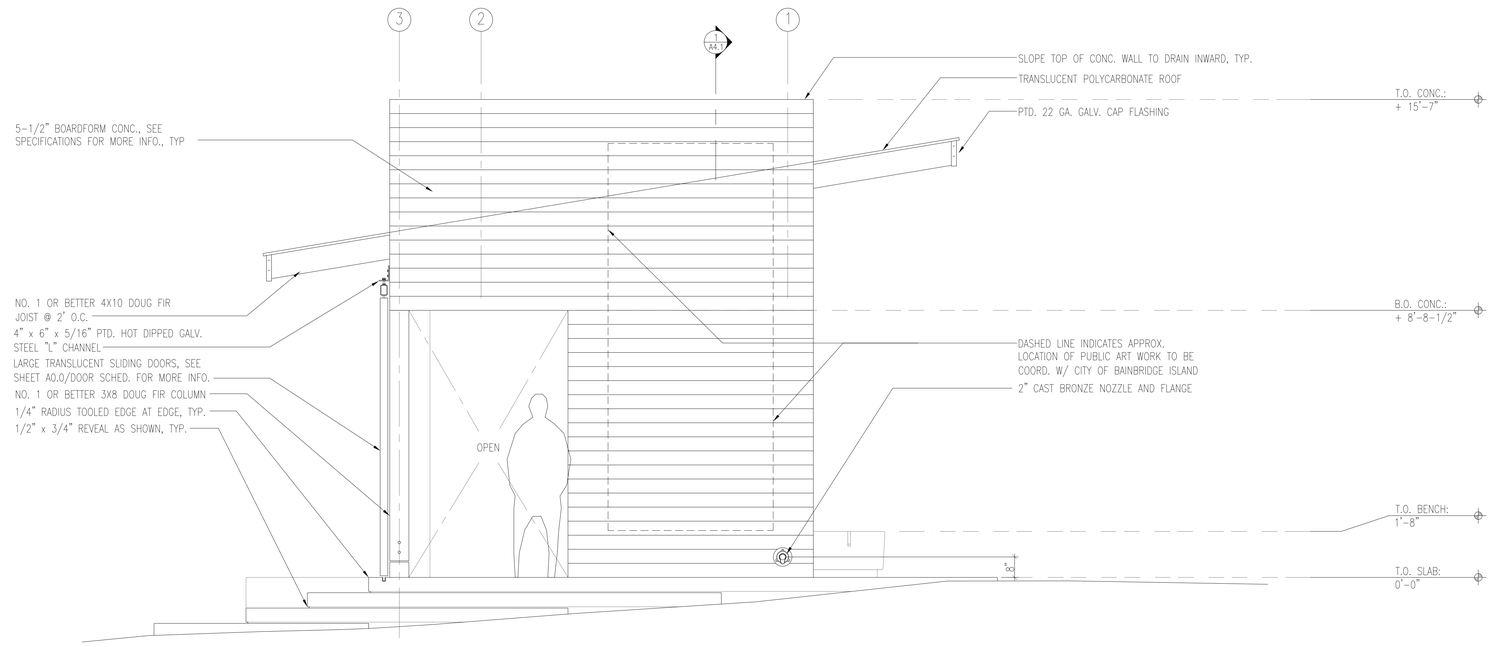

2 EAST ELEVATION
SCALE: 1/2" = 1'-0"

NOT FOR CONSTRUCTION

CITY OF BAINBRIDGE ISLAND
280 MADISON AVE. NORTH
BAINBRIDGE ISLAND, WA 98110

WALKER | MACY

PATANO STUDIO ARCHITECTURE

EAGLE HARBOR WATERFRONT PARK
BAINBRIDGE ISLAND, WA

PROJECT NUMBER: P3119.01
DRAWN BY:
REVIEWED BY:
PHASE: COORDINATION SET
ISSUE DATE: 06/24/2015
REVISIONS:

ELEVATIONS

A3.0

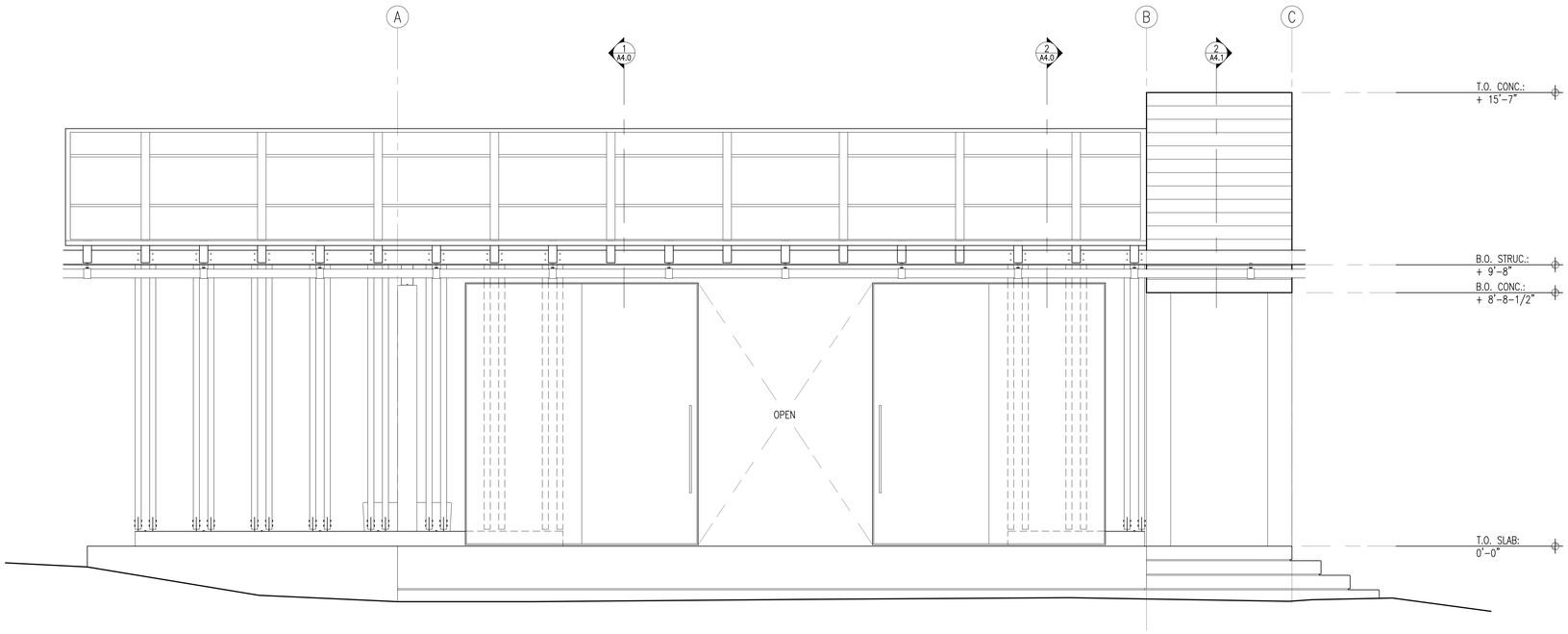

1 SOUTH ELEVATION
SCALE: 1/2" = 1'-0"

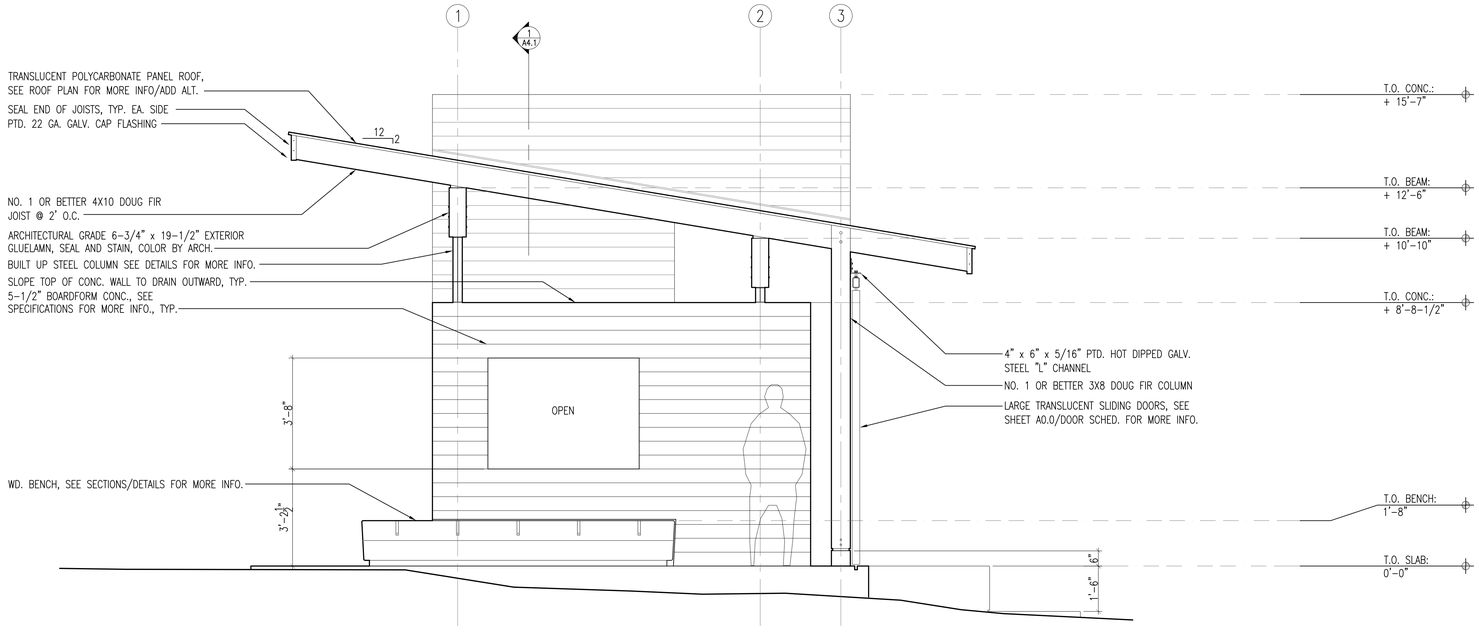

2 WEST ELEVATION
SCALE: 1/2" = 1'-0"

NOT FOR CONSTRUCTION

CITY OF BAINBRIDGE ISLAND
280 MADISON AVE. NORTH
BAINBRIDGE ISLAND, WA 98110

WALKER | MACY

PATANO STUDIO
ARCHITECTURE

EAGLE HARBOR WATERFRONT PARK
BAINBRIDGE ISLAND, WA

PROJECT NUMBER: P3119.01
DRAWN BY:
REVIEWED BY:
PHASE:
COORDINATION SET
ISSUE DATE:
06/24/2015
REVISIONS:

ELEVATIONS

A3.1

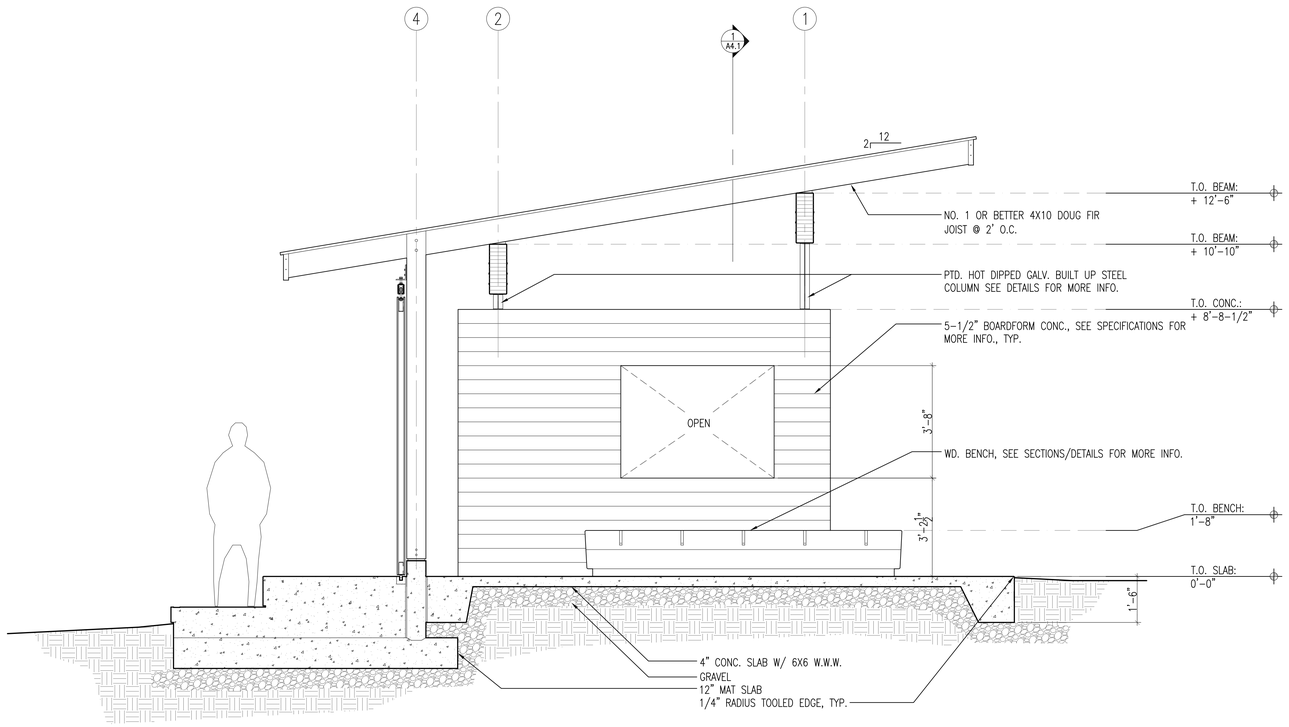

1 SECTION
SCALE: 1/2" = 1'-0"

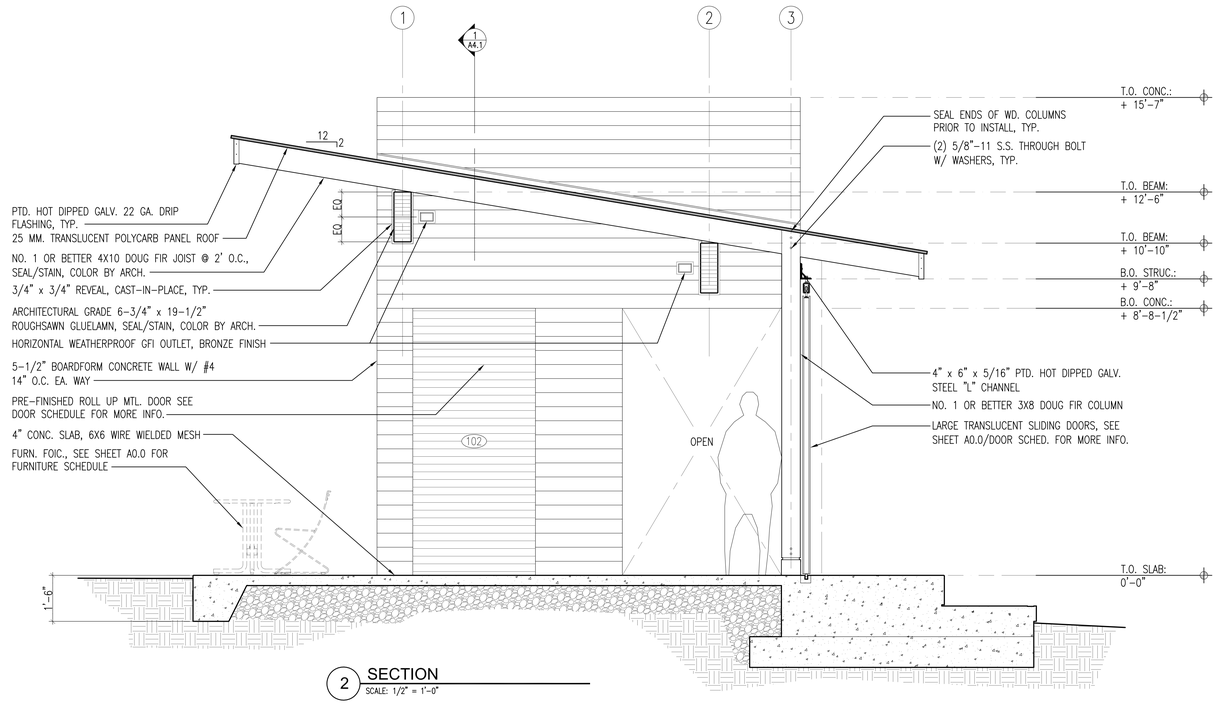

2 SECTION
SCALE: 1/2" = 1'-0"

NOT FOR CONSTRUCTION

CITY OF BAINBRIDGE ISLAND
280 MADISON AVE. NORTH
BAINBRIDGE ISLAND, WA 98110

WALKER | MACY

PATANO STUDIO
ARCHITECTURE

EAGLE HARBOR
WATERFRONT
PARK
BAINBRIDGE ISLAND, WA

PROJECT NUMBER: P3119.01
DRAWN BY:
REVIEWED BY:
PHASE:
COORDINATION
SET
ISSUE DATE:
06/24/2015
REVISIONS:

SECTIONS

A4.0

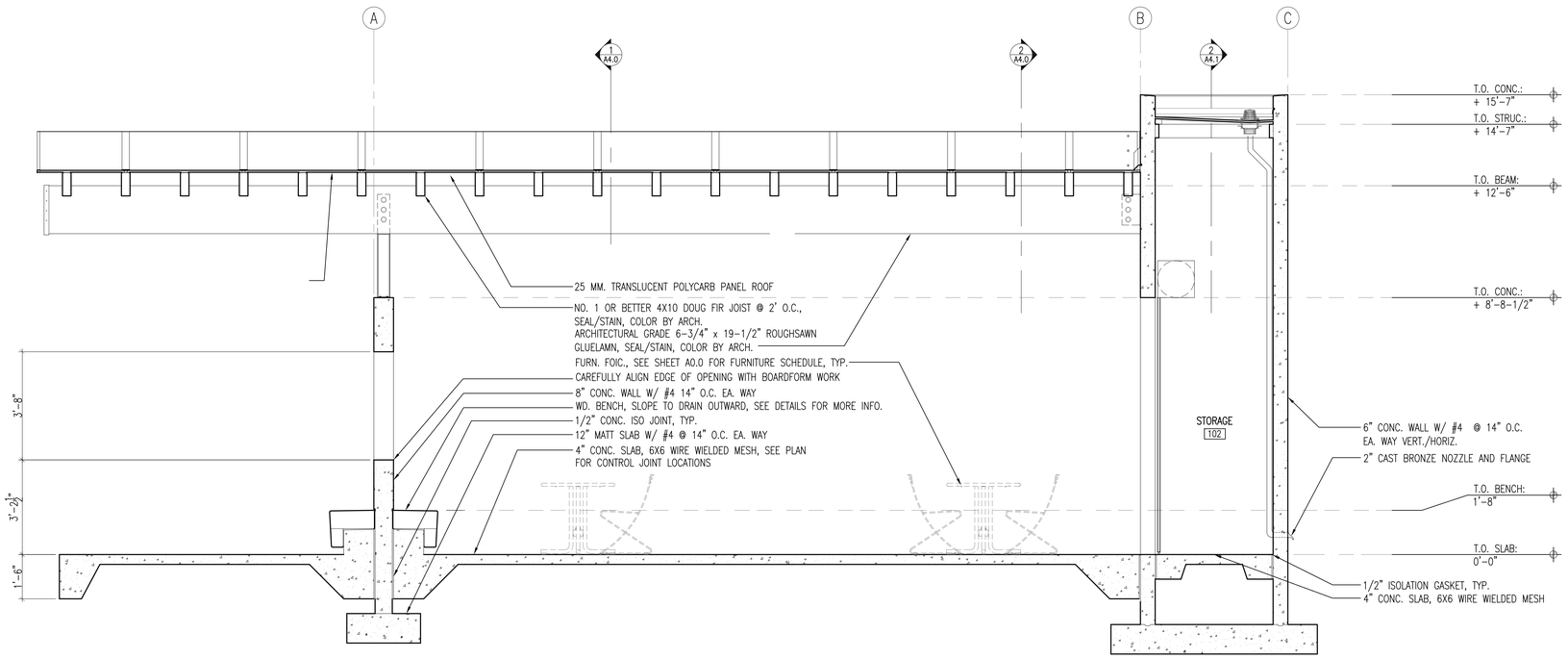

1 SECTION
SCALE: 1/2" = 1'-0"

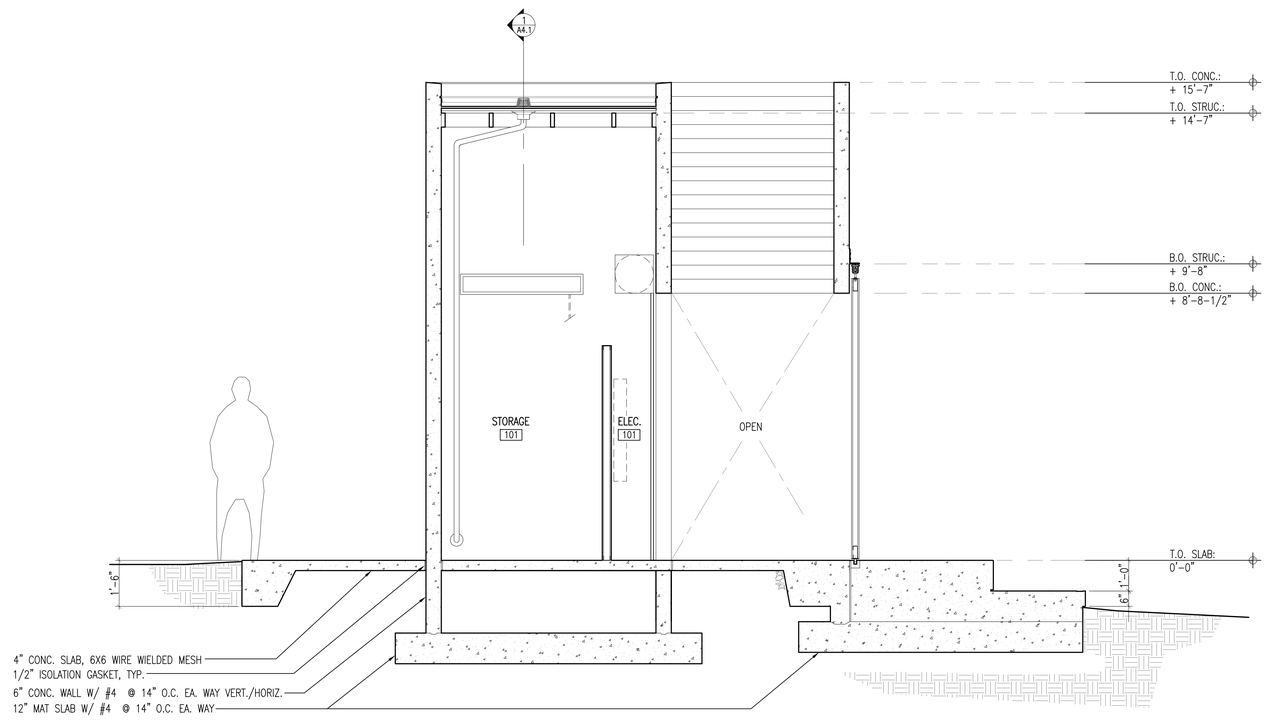

2 SECTION
SCALE: 1/2" = 1'-0"

NOT FOR CONSTRUCTION

CITY OF BAINBRIDGE ISLAND
280 MADISON AVE. NORTH
BAINBRIDGE ISLAND, WA 98110

WALKER | MACY

PATANO STUDIO ARCHITECTURE

EAGLE HARBOR WATERFRONT PARK
BAINBRIDGE ISLAND, WA

PROJECT NUMBER: P3119.01
DRAWN BY:
REVIEWED BY:
PHASE: COORDINATION SET
ISSUE DATE: 06/24/2015
REVISIONS:

SECTIONS

A4.1

ABBREVIATIONS

AFF	ABOVE FINISHED FLOOR	KVA	KILOVOLT AMP
A	AMPERE (AMP)	KVAR	KILOVOLT AMPS REACTIVE
AL	ALUMINUM	LA	LIGHTNING ARRESTOR
ARCH	ARCHITECT / ARCHITECTURAL	LTG	LIGHTING
ATS	AUTOMATIC TRANSFER SWITCH	LV	LOW VOLTAGE
CB	CIRCUIT BREAKER	MATV	MASTER ANTENNA TELEVISION
C	CONDUIT	MCA	MINIMUM CIRCUIT AMPS
CCTV	CLOSED CIRCUIT TELEVISION	MCB	MAIN CIRCUIT BREAKER
CKT	CIRCUIT	MCC	MOTOR CONTROL CENTER
CLG	CEILING	MDP	MAIN DISTRIBUTION PANEL
CT	CURRENT TRANSFORMER	MECH	MECHANICAL
CU	COPPER	MH	METAL HALIDE
DN	DOWN	MLO	MAIN LUGS ONLY
EMERG	EMERGENCY	MV	MERCURY VAPOR
EMT	ELECTRIC METALLIC TUBING	MTS	MANUAL TRANSFER SWITCH
EP	EXPLOSION PROOF	NIC	NOT IN CONTRACT
EPO	EMERGENCY POWER OFF	NL	NIGHT LIGHT CIRCUIT
EWC	ELECTRIC WATER COOLER	PA	PUBLIC ADDRESS
FA	FIRE ALARM	PE	PHOTO ELECTRIC CELL
FLA	FULL LOAD AMPS	PF	POWER FACTOR
FLUOR	FLUORESCENT	PNL	PANELBOARD
FCIC	FURNISHED BY CONTRACTOR INSTALLED BY CONTRACTOR	PVC	POLYVINYL CHLORIDE CONDUIT
		PWR	POWER
FOIC	FURNISHED BY OWNER INSTALLED BY CONTRACTOR	SDP	SUB-DISTRIBUTION PANEL
		STR	STARTER
FOIO	FURNISHED BY OWNER INSTALLED BY OWNER	SV	SOLENOID VALVE
		SW	SWITCH
GFP	GROUND FAULT PROTECTION	TD	TIME DELAY
GFI	GROUND FAULT INTERRUPTER	TP	TAMPERPROOF
GFCI	GROUND FAULT CIRCUIT INTERRUPTER	TTB	TELEPHONE TERMINAL BOARD
GRC	GALVANIZED RIGID CONDUIT	TTC	TELEPHONE TERMINAL CABINET
GRD	GROUND	TV	TELEVISION
HP	HORSEPOWER	TYP	TYPICAL
HPS	HIGH PRESSURE SODIUM	UG	UNDERGROUND
HV	HIGH VOLTAGE	UPS	UNINTERRUPTABLE POWER SUPPLY
HZ	HERTZ	V	VOLTAGE
IG	ISOLATED GROUND	VA	VOLT AMPERES
INC	INCANDESCENT	VP	VAPOR PROOF
JB	JUNCTION BOX	W	WATTS
KW	KILOWATT	WP	WEATHER PROOF
KWH	KILOWATT HOUR	XFMR	TRANSFORMER
KV	KILOVOLT	XFSW	TRANSFER SWITCH

DESIGNATION SYMBOLS

--- 123	EQUIPMENT DESIGNATOR SEE SCHEDULE.
E X	EXISTING TO REMAIN, EXISTING TO BE REMOVED
R F	EXISTING TO BE RELOCATED, FUTURE
N C	NEW, CONNECT TO
1	NOTE

POWER

	WIRING IN UNDERGROUND CONDUIT NEW EXISTING
	CABINET
	5-20R DUPLEX RECEPTACLE

NOTE

THIS IS A STANDARD LEGEND SHEET, THEREFORE, SOME SYMBOLS MAY APPEAR ON THIS SHEET THAT DO NOT APPEAR ON THE DRAWINGS.

ENERGY CODE COMPLIANCE

COMPLY WITH ALL REQUIREMENTS OF THE 2012 WASHINGTON STATE ENERGY CODE (WSEC).

LIGHTING CONTROLS: REUSE EXISTING PHOTOCELL CONTROLS FOR AUTOMATIC CONTROLS OF PATHWAY LIGHTING.

COMMISSIONING: PROVIDE COMMISSIONING OF ELECTRICAL POWER AND LIGHTING SYSTEMS PER THE REQUIREMENTS OF THE WSEC. COMMISSIONING SHALL INCLUDE TESTING AND PROGRAMMING OF AUTOMATIC CONTROLS TO COMPLY WITH REQUIREMENTS OF WSEC AND USERS.

ELECTRICAL GENERAL NOTES AND SPECIFICATIONS

A. GENERAL REQUIREMENTS:

A.A. REFER ALSO TO DIVISION 01 SPECIFICATIONS FOR ADDITIONAL REQUIREMENTS.

A.B. THE INTENT IS TO PROVIDE A COMPLETE AND WORKABLE PATH LIGHTING SYSTEM AND FESTIVAL POWER CONNECTION PANELS WITH COMPLETE SYSTEMS AS SHOWN, SPECIFIED AND REQUIRED BY APPLICABLE CODES.

A.C. THE COMPLETED INSTALLATION SHALL CONFORM TO ALL APPLICABLE FEDERAL, STATE AND LOCAL CODES, ORDINANCES AND REGULATIONS INCLUDING NECESSARY PERMITS AND INSPECTIONS REQUIRED BY THE GOVERNING AUTHORITIES.

A.D. DO ALL WORK IN A NEAT, WORKMANLIKE, FINISHED AND SAFE MANNER, ACCORDING TO THE LATEST PUBLISHED N.E.C.A. STANDARDS OF INSTALLATION, UNDER COMPETENT SUPERVISION.

B. MATERIALS AND EQUIPMENT:

B.A. ALL MATERIALS SHALL BE NEW AND CURRENTLY MANUFACTURED. ALL MATERIAL SHALL UL LABELED AND MEET ALL INDUSTRY STANDARDS.

B.B. THE USE OF MANUFACTURER'S NAMES, MODELS AND NUMBERS IS INTENDED TO ESTABLISH STYLE, QUALITY, APPEARANCE AND USEFULNESS. PROPOSED SUBSTITUTIONS REQUIRE PRE-BID WRITTEN APPROVAL OF THE ARCHITECT.

B.C. SUBMITTALS:

B.C.A. PRIOR TO CONSTRUCTION: SUBMIT FOR THE ARCHITECT'S APPROVAL A MATERIAL LIST CONTAINING THE MANUFACTURER'S DETAILED SPECIFICATIONS AND DATA SHEETS FOR EQUIPMENT TO BE FURNISHED. SUBMIT IN PDF FORMAT, IN SEPARATE FILES BY SYSTEM, FOR THE FOLLOWING ITEMS OF EQUIPMENT AND SYSTEMS: PANELBOARDS, ENCLOSURES, METER SOCKETS, CIRCUIT BREAKERS, CONDUCTORS, WIRING DEVICES, RACEWAY, AND LUMINAIRES.

B.C.B. AT COMPLETION OF CONSTRUCTION: REFER TO DIVISION 01 SPECIFICATIONS FOR AS-BUILT AND O&M MANUAL REQUIREMENTS.

B.D. GUARANTEE: FURNISH WRITTEN GUARANTEE TO THE OWNER, EFFECTIVE FOR A PERIOD OF ONE YEAR AFTER DATE OF SUBSTANTIAL COMPLETION, COVERING ALL DEFECTS IN CONTRACTOR FURNISHED MATERIALS AND WORKMANSHIP. THE CONTRACTOR SHALL AGREE TO REMEDY ANY DEFECT BY REPLACEMENT OF DEFECTIVE PART WITHOUT ADDITIONAL COST TO OWNER DURING THE PERIOD OF GUARANTEE.

B.E. ALL FINISHES SHALL BE MANUFACTURER'S STANDARD COLOR AS SELECTED BY ARCHITECT.

C. TESTING AND COMMISSIONING:

C.A. LIGHTING & ENERGY CONTROL: PROVIDE COMMISSIONING OF ELECTRICAL POWER AND LIGHTING SYSTEMS PER THE REQUIREMENTS OF THE 2012 WASHINGTON STATE ENERGY CODE. COMMISSIONING SHALL INCLUDE TESTING AND PROGRAMMING OF AUTOMATIC CONTROLS TO COMPLY WITH REQUIREMENTS OF THE WSEC AND OF USERS.

D. DEMOLITION AND CONSTRUCTION – GENERAL:

D.A. PROTECT ALL ELECTRICAL MATERIAL AND EQUIPMENT INSTALLED UNDER THIS DIVISION AGAINST DAMAGE BY OTHER TRADES, WEATHER CONDITIONS OR ANY OTHER CAUSES. EQUIPMENT FOUND DAMAGED OR IN OTHER THAN NEW CONDITION WILL BE REJECTED AND REQUIRE REPLACEMENT.

D.B. KEEP OUTAGES TO OCCUPIED AREAS TO A MINIMUM AND PREARRANGE ALL OUTAGES WITH THE BUILDING'S OWNER. REQUESTS FOR OUTAGES SHALL STATE THE SPECIFIC DATES AND HOURS AND THE MAXIMUM DURATION, WITH THE OUTAGES KEPT TO THESE SPECIFIC TIMES. THIS CONTRACTOR WILL BE LIABLE FOR ANY DAMAGES RESULTING FROM UNSCHEDULED OUTAGES OR FOR THOSE NOT CONFINED TO THE PREAPPROVED TIMES. INCLUDE ALL COSTS FOR OVERTIME LABOR AS NECESSARY TO MAINTAIN ELECTRICAL SERVICES IN THE INITIAL BID PROPOSAL.

D.C. TEMPORARY WIRING AND FACILITIES, IF USED, SHALL BE REMOVED AND THE SITE LEFT CLEAN BEFORE FINAL ACCEPTANCE.

D.D. REMOVE ALL ELECTRICAL WIRING, EQUIPMENT, FIXTURES, ETC., ABANDONED AS A RESULT OF THIS WORK. WIRING WHICH SERVES EXISTING-TO-REMAIN OUTLETS OR FIXTURES SHALL BE RESTORED AT THE COMPLETION OF WORK. REMOVED MATERIALS NOT SCHEDULED FOR REUSE SHALL BECOME THE PROPERTY OF THE CONTRACTOR FOR REMOVAL FROM THE SITE.

D.E. COOPERATE WITH ALL OTHER TRADES FOR PROPER INSTALLATION OF ALL ITEMS OF EQUIPMENT. CONSULT THE DRAWINGS OF ALL OTHER TRADES OR CRAFTS TO AVOID CONFLICTS WITH OTHER TRADES SUCH AS SITE ELEMENTS, SITE FURNITURE, PAVING, ETC. IN GENERAL, THE ARCHITECTURAL DRAWINGS GOVERN BUT CONFLICTS SHALL BE RESOLVED PRIOR TO ROUGH-IN.

D.F. DRILLING OR CUTTING OF EXISTING-TO-REMAIN PAVING: PRIOR TO DRILLING OR CUTTING PAVING OR CONCRETE, MARK LOCATION WITH PAINT AND OBTAIN APPROVAL OF LOCATION FROM ARCHITECT.

D.G. LEAVE THE SITE CLEAN AND READY FOR OCCUPANCY. REMOVE ALL DIRT, DEBRIS, EMPTY CARTONS, TOOLS, CONDUIT AND WIRE SCRAPS AND ALL MISCELLANEOUS SPARE EQUIPMENT AND MATERIALS USED IN THIS DIVISION OF THE WORK DURING CONSTRUCTION. ALL COMPONENTS SHALL BE FREE OF DUST, GRIT AND FOREIGN MATERIALS, LEFT AS NEW BEFORE FINAL ACCEPTANCE OF WORK.

D.H. PROVIDE ENGRAVED EQUIPMENT NAME PLATES ON ALL PANELBOARDS. NAMEPLATE SHALL INDICATE VOLTAGE, AMPERAGE, PHASES, AND LOCATION OF SERVICE.

D.I. PROVIDE ALL SUPPORT HARDWARE AND SYSTEMS FOR ELECTRICAL WORK. SUPPORTS SHALL BE COOPER B-LINE.

E. PANELBOARDS:

E.A. ALL PANELBOARDS SHALL BE SERVICE-ENTRANCE RATED AND HAVE MAIN CIRCUIT BREAKERS RATED FOR USE AS A SERVICE DISCONNECT.

E.B. ALL PANELBOARDS SHALL BE NEMA 4X CONSTRUCTION.

E.C. BRANCH CIRCUIT PROTECTION SHALL BE CIRCUIT BREAKER TYPE. CIRCUIT BREAKERS SHALL BE MOLDED-CASE.

E.D. PANELBOARDS AND BREAKERS SHALL BE SHORT CIRCUIT RATED 10KAIC MINIMUM. PROVIDE LABEL INSIDE DOOR OF EACH PANELBOARD INDICATING AVAILABLE FAULT CURRENT AS REPORTED BY PUGET SOUND ENERGY, AND FAULT CURRENT RATING OF THE PANELBOARD ASSEMBLY.

E.E. PROVIDE NEW CIRCUIT BREAKERS IN EXISTING PANELS. BREAKERS SHALL BE OF SAME BRAND AND AIC RATING AS EXISTING BREAKERS IN PANEL, AND SHALL BE COMPATIBLE WITH PANEL.

E.E.A. IF PANEL IS COMPATIBLE WITH BOTH PLUG-ON AND BOLT-ON BREAKERS, PROVIDE BOLT-ON BREAKERS.

E.F. CIRCUIT BREAKERS USED TO SWITCH LIGHTING CIRCUITS SHALL BE "SWD" RATED.

E.G. PROVIDE NEW, COMPLETE PANEL INDEX FOR EACH PANEL, TYPEWRITTEN ONLY. INDEX SHALL BE SUFFICIENTLY DESCRIPTIVE TO EASILY LOCATE CONTROLLED DEVICES/EQUIPMENT. UPDATE PANEL INDICES AND AS-BUILTS WITH CORRECT CIRCUIT INFORMATION FOR ALL CIRCUITS.

E.H. BALANCE PHASE LOADS SO THAT THEY ARE AS CLOSE TO EQUAL AS POSSIBLE, AND IN ACCORDANCE WITH THE NATIONAL ELECTRICAL CODE.

E.I. PROVIDE ARC FLASH HAZARD STUDY AND PRODUCE ARC FLASH LABELS AS REQUIRED BY NFPA 70E. ARC FLASH HAZARD ANALYSIS SHALL BE PERFORMED ACCORDING TO THE IEEE 1584 EQUATIONS AS PRESENTED IN NFPA 70E. PROVIDE LABEL FOR EACH PANELBOARD, FORMAT AND MOUNTING OF LABEL SHALL COMPLY WITH NFPA 70E.

E.J. ACCEPTABLE MANUFACTURERS: SIEMENS, GE, SQUARE-D, EATON CUTLER-HAMMER, OR APPROVED EQUAL.

F. METER SOCKETS:

F.A. PROVIDE METER SOCKETS IN COMPLIANCE WITH PUGET SOUND ENERGY'S REQUIREMENTS.

F.B. METER SOCKETS SHALL BE NEMA 4X CONSTRUCTION MINIMUM.

F.C. ACCEPTABLE MANUFACTURERS: METER SOCKET SHALL BE OF SAME MANUFACTURER AS PANELBOARDS.

G. ENCLOSURES:

G.A. ENCLOSURES SHALL BE GALVANIZED, CODE-GAUGE FORMED STEEL, NEMA 4X CONSTRUCTION.

G.B. FINISH: MANUFACTURER STANDARD PAINT OR ENAMEL.

H. CONDUIT/RACEWAYS:

H.A. ALL WIRING FOR POWER AND SYSTEMS SHALL BE CONDUCTORS IN CONDUIT.

H.B. CONDUIT SHALL BE CONCEALED IN SLABS OR UNDERGROUND, 12" MINIMUM COVER (EXCEPT 24" WHERE UNDER PARKING LOTS AND DRIVE AISLES).

H.C. CONDUIT SHALL BE SCHED. 80 PVC OR RIGID METAL CONDUIT.

H.D. PAINT ALL EXPOSED CONDUITS, COLOR AS DIRECTED BY ARCHITECT.

H.E. PROVIDE INSULATED CONDUIT BUSHINGS AT EACH END OF EVERY CONDUIT RUN.

I. CONDUCTORS:

I.A. PROVIDE CONDUCTORS FOR ALL CIRCUITING, WIRING, AND SYSTEMS.

I.B. ALL CONDUCTORS SHALL BE SIZED FOR MAXIMUM VOLTAGE DROP OF 3%.

I.B.A. ALL LIGHTING CIRCUIT CONDUCTORS (INCLUDING NEUTRAL AND GROUND) SHALL BE MINIMUM #10.

I.C. CONDUCTORS SHALL BE PROPERLY PHASE AND COLOR CODED:

COLOR CODING:	120/240V
PHASE A	BLACK
PHASE B	RED
NEUTRAL	WHITE
GROUND	GREEN

I.D. UTILIZE CONDUCTORS AND CONNECTORS AS FOLLOWS:

I.D.A. #10 AND SMALLER – SOLID COPPER, THWN COLOR CODED.

I.D.B. #6 AND #8 – STRANDED COPPER THWN COLOR CODED.

I.D.C. TWIST ON TYPE FOR #8 AND SMALLER COPPER CONNECTIONS.

I.D.D. CRIMPED TYPE FOR #4 AND LARGER COPPER CONNECTORS.

I.D.E. COMPLETELY INSULATE EACH CONNECTION, SPLICE AND TERMINATE.

I.D.F. USE OF ALUMINUM (AL) IS STRICTLY PROHIBITED.

I.D.G. MINIMUM CONDUCTOR SIZE SHALL BE #12 AWG WITH THWN INSULATION IN CONDUIT.

I.E. LABEL CIRCUIT ON THE CONDUCTOR AT EACH BOX.

J. GROUNDING:

J.A. INSTALL GROUNDING AS REQUIRED BY THE NATIONAL ELECTRICAL CODE AND PUGET SOUND ENERGY.

J.B. PROVIDE SERVICE GROUNDING ELECTRODE CONDUCTOR AND GROUND ROD AT SERVICE ENTRANCE PANEL. GROUNDING ELECTRODE CONDUCTOR AND GROUND ROD SHALL BE SIZED AS REQUIRED BY THE NATIONAL ELECTRICAL CODE AND PUGET SOUND ENERGY.

J.C. PROVIDE INSULATED GROUND CONDUCTOR IN ALL CONDUITS. CODE-MINIMUM SIZE UNLESS NOTED OTHERWISE.

K. WIRING DEVICES:

K.A. WIRING DEVICES SHALL BE COMPLETE WITH ALL HARDWARE AND COVER PLATES AND SHALL BE GROUNDED TO BOX BY GREEN GROUND WIRE PIGTAIL.

K.B. MOUNTING HEIGHTS ARE NOTED ABOVE FINISHED GRADE, REFER TO ARCHITECTURAL ELEVATIONS.

K.C. ALL RECEPTACLES SHALL BE FLUSH, UNLESS NOTED OTHERWISE.

K.B. DUPLEX: 20 AMPERE, GROUNDED, HEAVY DUTY WEATHER RESISTANT, COMMERCIAL SPECIFICATION GRADE.

K.C. PROVIDE DEDICATED RECEPTACLES FOR ALL EQUIPMENT, ITEMS, AND APPLIANCES.

K.D. ALL DEVICES AND COVER PLATES SHALL BE FINISH AS SELECTED BY ARCHITECT.

L. OUTLET BOXES:

L.A. ATTACH SECURELY TO BUILDING CONSTRUCTION SUPPORT.

L.B. EXPOSED BOXES: CAST TYPE SIMILAR TO HINDS FS.

L.C. ALL OTHERS STAMPED STEEL.

M. LIGHTING:

M.A. LIGHT FIXTURES AND CONTROLS SYSTEMS SHALL BE FURNISHED BY CONTRACTOR, EXCEPT WHERE NOTED AS EXISTING TO BE RELOCATED. CONTRACTOR IS RESPONSIBLE FOR MOUNTING, FINAL CONNECTION, AND PROGRAMMING OF ALL FIXTURES AND LIGHTING CONTROLS, BOTH NEW AND RELOCATED.

M.B. CONTRACTOR IS RESPONSIBLE FOR PROVIDING CORRECT FIXTURE TRIM AND MOUNTING ACCESSORIES FOR SURFACE TYPE IN/ON WHICH EACH FIXTURE IS BEING INSTALLED.

M.C. PROVIDE BALLAST AND DRIVER TYPES AS SHOWN IN FIXTURE SCHEDULE.

M.D. MATCH VOLTAGE OF FIXTURE TO CIRCUIT TO WHICH IT IS SHOWN CONNECTED.

M.E. NARRATIVE DESCRIPTION IN LIGHTING FIXTURE SCHEDULE TAKES PRECEDENCE OVER CATALOG NUMBER.

N. LIGHTING AND ENERGY CONTROLS:

N.A. INTENT IS TO REUSE EXISTING PHOTOCELL LIGHTING CONTROLS.

N.B. PROVIDE ALL LIGHTING AND ENERGY CONTROLS REQUIRED FOR COMPLIANCE WITH 2012 WASHINGTON STATE ENERGY CODE (WSEC).

N.C. REPROGRAM EXISTING CONTROLS AS REQUIRED TO COMPLY WITH ENERGY CODE.

N.D. PROVIDE NEW EQUIPMENT, RELAYS, DEVICES, AND CIRCUITING AS REQUIRED TO COMPLY WITH ENERGY CODE.

N.E. PROVIDE PROGRAMMING AND TESTING OF ALL CONTROLS, BOTH NEW AND REVISED. DEMONSTRATE CONTROLS TO OWNER AND ADJUST PROGRAMMING AS REQUESTED BY OWNER, EXCEPT THAT PROGRAMMING SHALL STILL COMPLY WITH ENERGY CODE.

0 5 10 20 40
SCALE: 1" = 20'-0"
NORTH

CITY OF BAINBRIDGE ISLAND
280 MADISON AVE. NORTH
BAINBRIDGE ISLAND, WA 98110

WALKER | MACY

PAE
Portland | San Francisco | Seattle
pae-engineers.com

EAGLE HARBOR WATERFRONT PARK
BAINBRIDGE ISLAND, WA

6-26-2015

PROJECT NUMBER:	P3119.01
DRAWN BY: MAA2	REVIEWED BY: NJW

PHASE:
100% CONSTRUCTION DOCUMENTS
ISSUE DATE:
07/06/2015
REVISIONS:

SYMBOLS, LEGENDS ABBREVIATIONS

E0

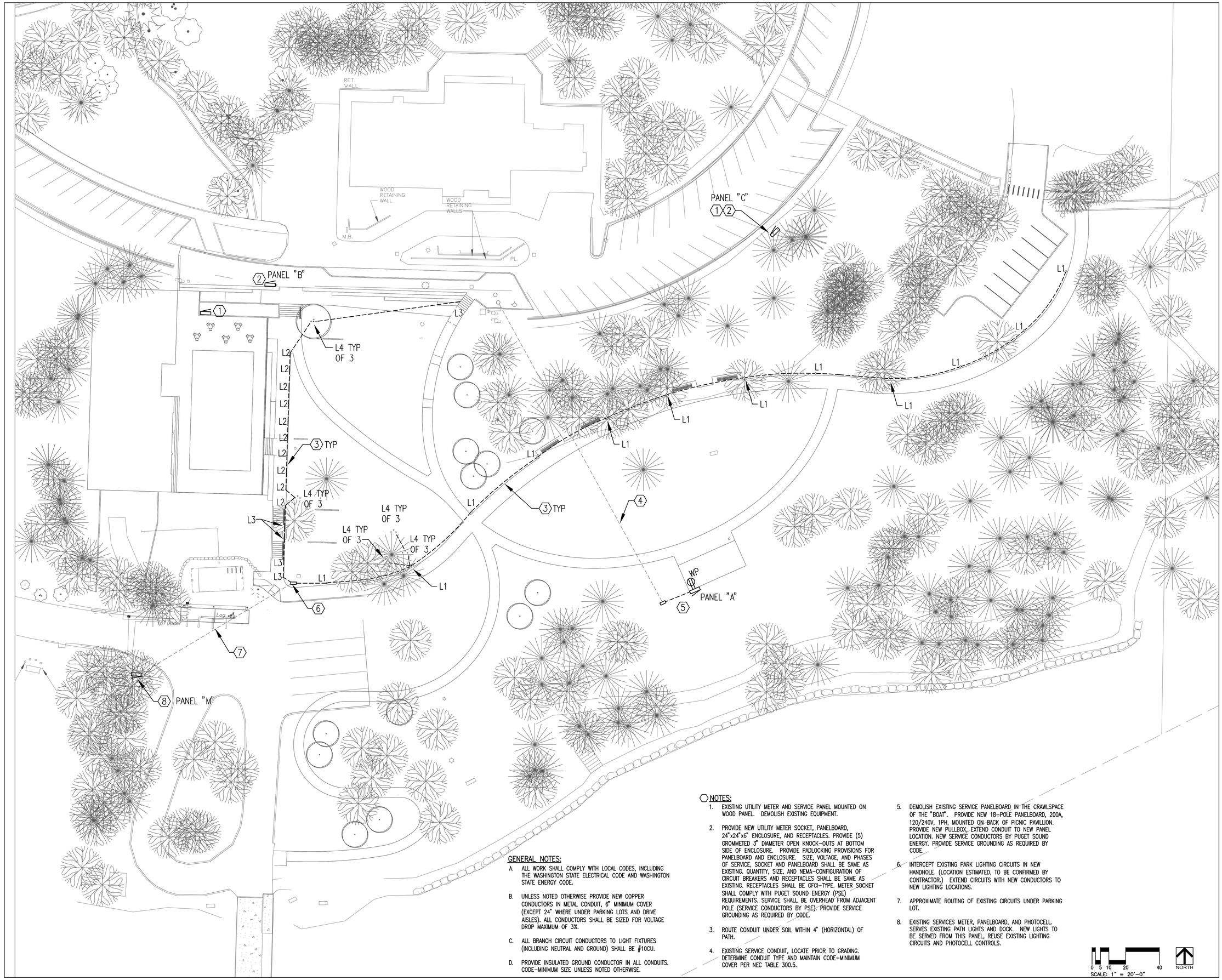

GENERAL NOTES:

A. ALL WORK SHALL COMPLY WITH LOCAL CODES, INCLUDING THE WASHINGTON STATE ELECTRICAL CODE AND WASHINGTON STATE ENERGY CODE.

B. UNLESS NOTED OTHERWISE PROVIDE NEW COPPER CONDUCTORS IN METAL CONDUIT, 6" MINIMUM COVER (EXCEPT 24" WHERE UNDER PARKING LOTS AND DRIVE AISLES). ALL CONDUCTORS SHALL BE SIZED FOR VOLTAGE DROP MAXIMUM OF 3%.

C. ALL BRANCH CIRCUIT CONDUCTORS TO LIGHT FIXTURES (INCLUDING NEUTRAL AND GROUND) SHALL BE #10CU.

D. PROVIDE INSULATED GROUND CONDUCTOR IN ALL CONDUITS. CODE-MINIMUM SIZE UNLESS NOTED OTHERWISE.

NOTES:

1. EXISTING UTILITY METER AND SERVICE PANEL MOUNTED ON WOOD PANEL. DEMOLISH EXISTING EQUIPMENT.
2. PROVIDE NEW UTILITY METER SOCKET, PANELBOARD, 24"x24"x6" ENCLOSURE, AND RECEPTACLES. PROVIDE (5) GROMMETED 3" DIAMETER OPEN KNOCK-OUTS AT BOTTOM SIDE OF ENCLOSURE. PROVIDE PADLOCKING PROVISIONS FOR PANELBOARD AND ENCLOSURE. SIZE, VOLTAGE, AND PHASES OF SERVICE, SOCKET AND PANELBOARD SHALL BE SAME AS EXISTING. QUANTITY, SIZE, AND NEMA-CONFIGURATION OF CIRCUIT BREAKERS AND RECEPTACLES SHALL BE SAME AS EXISTING. RECEPTACLES SHALL BE GFCI-TYPE. METER SOCKET SHALL COMPLY WITH PUGET SOUND ENERGY (PSE) REQUIREMENTS. SERVICE SHALL BE OVERHEAD FROM ADJACENT POLE (SERVICE CONDUCTORS BY PSE). PROVIDE SERVICE GROUNDING AS REQUIRED BY CODE.
3. ROUTE CONDUIT UNDER SOIL WITHIN 4" (HORIZONTAL) OF PATH.
4. EXISTING SERVICE CONDUIT, LOCATE PRIOR TO GRADING. DETERMINE CONDUIT TYPE AND MAINTAIN CODE-MINIMUM COVER PER NEC TABLE 300.5.
5. DEMOLISH EXISTING SERVICE PANELBOARD IN THE CRAWLSPACE OF THE "BOAT". PROVIDE NEW 18-POLE PANELBOARD, 200A, 120/240V, 1PH, MOUNTED ON BACK OF PICNIC PAVILLION. PROVIDE NEW PULLBOX, EXTEND CONDUIT TO NEW PANEL LOCATION. NEW SERVICE CONDUCTORS BY PUGET SOUND ENERGY. PROVIDE SERVICE GROUNDING AS REQUIRED BY CODE.
6. INTERCEPT EXISTING PARK LIGHTING CIRCUITS IN NEW HANDHOLE. (LOCATION ESTIMATED, TO BE CONFIRMED BY CONTRACTOR.) EXTEND CIRCUITS WITH NEW CONDUCTORS TO NEW LIGHTING LOCATIONS.
7. APPROXIMATE ROUTING OF EXISTING CIRCUITS UNDER PARKING LOT.
8. EXISTING SERVICES METER, PANELBOARD, AND PHOTOCELL. SERVES EXISTING PATH LIGHTS AND DOCK. NEW LIGHTS TO BE SERVED FROM THIS PANEL, REUSE EXISTING LIGHTING CIRCUITS AND PHOTOCELL CONTROLS.

0 5 10 20 40
SCALE: 1" = 20'-0"
NORTH

CITY OF BAINBRIDGE ISLAND
280 MADISON AVE. NORTH
BAINBRIDGE ISLAND, WA 98110

WALKER | MACY

PAE
Portland | San Francisco | Seattle
pae-engineers.com

EAGLE HARBOR WATERFRONT PARK

BAINBRIDGE ISLAND, WA

6-26-2015

PROJECT NUMBER: P3119.01
DRAWN BY: MAA2 REVIEWED BY: NJW
PHASE: 100% CONSTRUCTION DOCUMENTS
ISSUE DATE: 07/06/2015
REVISIONS:

SITE PLAN - ELECTRICAL

E1

PANEL NAME:	**M**	BUS RATING (AMP): 200	1PHASE
LOCATION:	SW LOT	VOLTAGE: 120 / 240	3 WIRE
SHORT CIRCUIT RATING:	10,000 AIC	MAIN BKR: 60	
MOUNTING:	SURFACE	FEED: TOP	
NEMA RATING:	3R	NUMBER OF POLES: 18	

NO.	CIRCUIT DESCRIPTION	CB/PH	KVA	PH	KVA	CB/PH	CIRCUIT DESCRIPTION	NO.
1	PARK LIGHTS (EXISTING BREAKER)	20/1	0.24	A		20/1	SPARE (EXISTING BREAKER)	2
3	PARK LIGHTS (EXISTING BREAKER)	20/1	0.54	B		20/1	SPARE (EXISTING BREAKER)	4
5	LIGHT CONTROLS (EXISTING BREAKER)	20/1	0.10	A	#####	60/2	DOCK (EXISTING BREAKER)	6
7	SPARE (EXISTING BREAKER)	20/1		B	#####	"	"	8
9				A				10
11				B				12
13				A				14
15				B				16
17				A				18

LOAD	CON LD (KVA)	DEM FCT (%)	DEM LD (KVA)
SUB FEED		100%	
LIGHTING	0.78	125%	0.97
RECEPT <10KVA		100%	
RECEPT >10KVA		50%	
MOTORS ALL		100%	
LARGEST		25%	
HEATING			
COOLING			
KITCHEN		100%	
MISC. & COMP	5760.10	100%	5760.10
MISC CONT.		125%	

KVA/PHASE A:	#####	CONNECTED LOAD IN KVA:	5,761
KVA/PHASE B:	#####	DEMAND LOAD IN KVA:	5,761
		MAXIMUM AMPS PER PHASE:	####

SPECIAL INSTRUCTIONS:
NOTE:
EXISTING PANEL AND BREAKERS TO REMAIN.

PANEL NAME:	**A**	BUS RATING (AMP): 200	1PHASE
LOCATION:	SOUTH FIELD	VOLTAGE: 120 / 240	3 WIRE
SHORT CIRCUIT RATING:	10,000 AIC	MAIN BKR: ##	
MOUNTING:	SURFACE	FEED: BOTTOM	
NEMA RATING:	4X	NUMBER OF POLES: 18	

NO.	CIRCUIT DESCRIPTION	CB/PH	KVA	PH	KVA	CB/PH	CIRCUIT DESCRIPTION	NO.
1	PICNIC SHELTER RECEPT	20/1	0.18	A				2
3	SPARE	20/1		B				4
5	SPARE	20/1		A				6
7	SPARE	20/1		B				8
9				A				10
11				B				12
13				A				14
15				B				16
17				A				18

LOAD	CON LD (KVA)	DEM FCT (%)	DEM LD (KVA)
SUB FEED		100%	
LIGHTING		125%	
RECEPT <10KVA	0.18	100%	0.18
RECEPT >10KVA		50%	
MOTORS ALL		100%	
LARGEST		25%	
HEATING			
COOLING			
KITCHEN		100%	
MISC. & COMP		100%	
MISC CONT.		125%	

KVA/PHASE A:	0.18	CONNECTED LOAD IN KVA:	0
KVA/PHASE B:		DEMAND LOAD IN KVA:	0
		MAXIMUM AMPS PER PHASE:	2

SPECIAL INSTRUCTIONS:
NOTE:

PANEL NAME:	**B**	BUS RATING (AMP): 200	1PHASE
LOCATION:	W FESTIVAL POWER	VOLTAGE: 120 / 240	3 WIRE
SHORT CIRCUIT RATING:	10,000 AIC	MAIN BKR: ##	
MOUNTING:	SURFACE	FEED: BOTTOM	
NEMA RATING:	4X	NUMBER OF POLES: 18	

NO.	CIRCUIT DESCRIPTION	CB/PH	KVA	PH	KVA	CB/PH	CIRCUIT DESCRIPTION	NO.
1	FESTIVAL POWER RECEPT	20/2	0.18	A	0.18	20/2	FESTIVAL POWER RECEPT	2
3	FESTIVAL POWER RECEPT		0.18	B	0.18		FESTIVAL POWER RECEPT	4
5	FESTIVAL POWER RECEPT	20/2	0.18	A	0.18	20/2	FESTIVAL POWER RECEPT	6
7	FESTIVAL POWER RECEPT		0.18	B	0.18		FESTIVAL POWER RECEPT	8
9	FESTIVAL POWER RECEPT	20/2	0.18	A				10
11	FESTIVAL POWER RECEPT		0.18	B				12
13	SPARE	20/1		A				14
15	SPARE	20/1		B				16
17	SPARE	20/1		A				18

LOAD	CON LD (KVA)	DEM FCT (%)	DEM LD (KVA)
SUB FEED		100%	
LIGHTING		125%	
RECEPT <10KVA	1.80	100%	1.80
RECEPT >10KVA		50%	
MOTORS ALL		100%	
LARGEST		25%	
HEATING			
COOLING			
KITCHEN		100%	
MISC. & COMP		100%	
MISC CONT.		125%	

KVA/PHASE A:	0.90	CONNECTED LOAD IN KVA:	2
KVA/PHASE B:	0.90	DEMAND LOAD IN KVA:	2
		MAXIMUM AMPS PER PHASE:	8

SPECIAL INSTRUCTIONS:
NOTE:

PANEL NAME:	**C**	BUS RATING (AMP): 200	1PHASE
LOCATION:	E FESTIVAL POWER	VOLTAGE: 120 / 240	3 WIRE
SHORT CIRCUIT RATING:	10,000 AIC	MAIN BKR: ##	
MOUNTING:	SURFACE	FEED: BOTTOM	
NEMA RATING:	4X	NUMBER OF POLES: 18	

NO.	CIRCUIT DESCRIPTION	CB/PH	KVA	PH	KVA	CB/PH	CIRCUIT DESCRIPTION	NO.
1	FESTIVAL POWER RECEPT	20/2	0.18	A	0.18	20/2	FESTIVAL POWER RECEPT	2
3	FESTIVAL POWER RECEPT		0.18	B	0.18		FESTIVAL POWER RECEPT	4
5	FESTIVAL POWER RECEPT	20/2	0.18	A	0.18	20/2	FESTIVAL POWER RECEPT	6
7	FESTIVAL POWER RECEPT		0.18	B	0.18		FESTIVAL POWER RECEPT	8
9	FESTIVAL POWER RECEPT	20/2	0.18	A				10
11	FESTIVAL POWER RECEPT		0.18	B				12
13	SPARE	20/1		A				14
15	SPARE	20/1		B				16
17	SPARE	20/1		A				18

LOAD	CON LD (KVA)	DEM FCT (%)	DEM LD (KVA)
SUB FEED		100%	
LIGHTING		125%	
RECEPT <10KVA	1.80	100%	1.80
RECEPT >10KVA		50%	
MOTORS ALL		100%	
LARGEST		25%	
HEATING			
COOLING			
KITCHEN		100%	
MISC. & COMP		100%	
MISC CONT.		125%	

KVA/PHASE A:	0.90	CONNECTED LOAD IN KVA:	2
KVA/PHASE B:	0.90	DEMAND LOAD IN KVA:	2
		MAXIMUM AMPS PER PHASE:	8

SPECIAL INSTRUCTIONS:
NOTE:

0 5 10 20 40
SCALE: 1" = 20'-0"
NORTH

CITY OF BAINBRIDGE ISLAND
280 MADISON AVE. NORTH
BAINBRIDGE ISLAND, WA 98110

WALKER | MACY

PAE
Portland | San Francisco | Seattle
pae-engineers.com

EAGLE HARBOR WATERFRONT PARK
BAINBRIDGE ISLAND, WA

6-26-2015

PROJECT NUMBER: P3119.01
DRAWN BY: NJW
REVIEWED BY: NJW
PHASE: 100% CONSTRUCTION DOCUMENTS
ISSUE DATE: 07/06/2015
REVISIONS

PANEL SCHEDULES & CALCULATIONS

E2

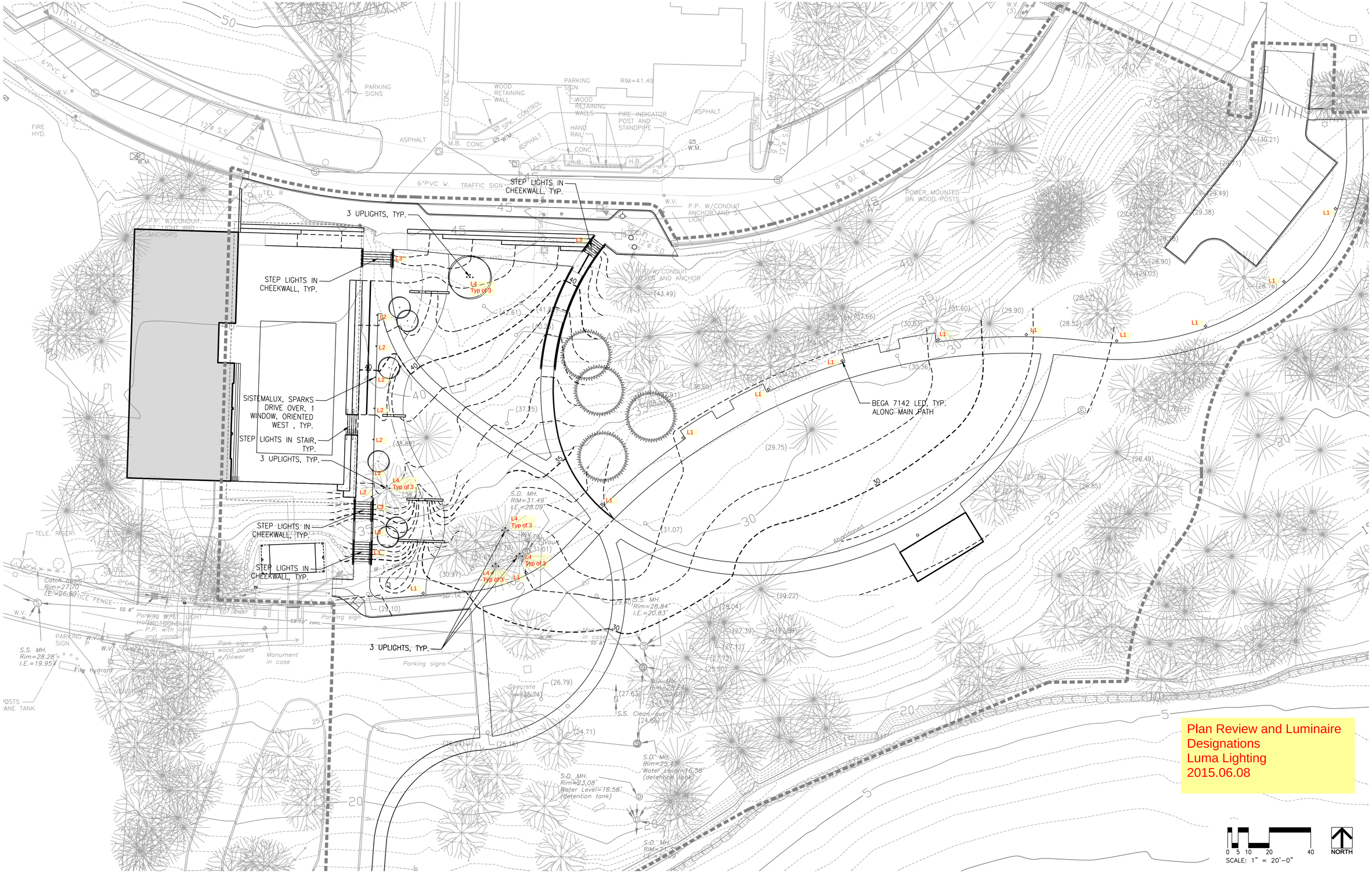
STEP LIGHTS IN CHEEKWALL, TYP.
3 UPLIGHTS, TYP.
STEP LIGHTS IN CHEEKWALL, TYP.
SISTEMALUX, SPARKS DRIVE OVER, 1 WINDOW, ORIENTED WEST , TYP.
STEP LIGHTS IN STAIR, TYP.
3 UPLIGHTS, TYP.
STEP LIGHTS IN CHEEKWALL, TYP.
STEP LIGHTS IN CHEEKWALL, TYP.
3 UPLIGHTS, TYP.
BEGA 7142 LED, TYP. ALONG MAIN PATH
L1
L2
L3
L4
Typ of 3
Plan Review and Luminaire Designations
Luma Lighting
2015.06.08
0 5 10 20 40
SCALE: 1" = 20'-0"
NORTH